NUCOR
VULCRAFT GROUP

VULCRAFT

STEEL JOISTS & JOIST GIRDERS

VULCRAFT 2013

8

5

STEEL JOISTS
JOIST GIRDERS

STEEL JOIST INSTITUTE SJI

It's Our Nature.®

CONTACT THE VULCRAFT SALES CORPORATION OFFICE NEAREST YOU:

Albuquerque, NM Area
Ph. (505) 892-0707
Fax (505) 892-2727

Atlanta, GA Area
Ph. (770) 307-2111
Fax (770) 307-1800

Baltimore, MD Area
Ph. (410) 998-0800
Fax (410) 998-0801

Birmingham, AL Area
Ph. (205) 982-4394
Fax (205) 982-6885

Boston, MA Area
Ph. (603) 894-1146
Fax (603) 894-1149

Chicago, IL Area
Ph. (630) 887-1400
Fax (630) 887-1477

Columbia, SC Area
Ph. (803) 732-5557
Fax (803) 732-5551

Dallas, TX Area
Ph. (214) 340-1883
Fax (214) 340-5897

Dayton, OH Area
Ph. (937) 390-2300
Fax (937) 390-2333

Denver, CO Area
Ph. (303) 757-6323
Fax (303) 757-6324

Des Moines, IA Area
Ph. (515) 270-2500
Fax (515) 270-8849

Detroit, MI Area
Ph. (248) 486-6166
Fax (248) 486-6169

Fargo, ND Area
Ph. (701) 235-6605
Fax (701) 235-9632

Ft. Wayne/S. Bend, IN Area
Ph. (260) 337-1800
Fax (260) 337-1801

Grand Rapids, MI Area
Ph. (616) 949-2106
Fax (616) 949-6694

Greensboro, NC Area
Ph. (336) 294-9544
Fax (336) 294-7636

Greenville, NC Area
Ph. (252) 493-0333
Fax (252) 493-0555

Houston, TX Area
Ph. (281) 251-8857
Fax (281) 251-9515

Indianapolis, IN Area
Ph. (317) 576-5399
Fax (317) 576-5395

Jackson, MS Area
Ph. (601) 992-3751
Fax (601) 992-3748

Jacksonville, FL Area
Ph. (904) 880-1150
Fax (904) 880-1151

Kansas City, KS Area
Ph. (913) 341-9299
Fax (913) 341-5764

Knoxville, TN Area
Ph. (865) 690-6388
Fax (865) 690-6389

Lexington, KY Area
Ph. (859) 271-2591
Fax (859) 271-2580

Little Rock, AR Area
Ph. (501) 758-6424
Fax (501) 758-6427

Los Angeles, CA Area
Ph. (714) 957-5713
Fax (714) 957-8871

Memphis, TN Area
Ph. (901) 751-3927
Fax (901) 751-3593

Metro New York Area
Ph. (732) 738-8188
Fax (732) 738-8288

Miami, FL Area
Ph. (954) 785-8695
Fax (954) 785-8696

Milwaukee/Green Bay, WI Area
Ph. (262) 251-5666
Fax (262) 251-7065

Minneapolis, MN Area
Ph. (763) 425-4399
Fax (763) 425-6905

Nashville, TN Area
Ph. (615) 871-9385
Fax (615) 871-9252

North Alabama Area
Ph. (256) 845-2460
Fax (256) 845-2823

Oklahoma City, OK Area
Ph. (405) 715-2844
Fax (405) 715-5855

Philadelphia, PA Area
Ph. (610) 539-6516
Fax (610) 539-6970

Phoenix/Las Vegas Area
Ph. (480) 730-3012
Fax (480) 730-2824

Richmond, VA Area
Ph. (804) 379-3704
Fax (804) 379-3709

Salt Lake City, UT Area
Ph. (801) 355-0431
Fax (801) 621-0927

San Antonio, TX Area
Ph. (210) 655-9070
Fax (210) 655-9504

San Francisco, CA Area
Ph. (925) 229-1020
Fax (925-229-2469

Seattle, WA Area
Ph. (425) 402-9011
Fax (425) 482-6433

St. Louis, MO Area
Ph. (314) 894-6076
Fax (314) 894-9173

Tampa, FL Area
Ph. (813) 621-0684
Fax (813) 626-4955

Upstate New York Area
Ph. (315) 828-1730
Fax (315) 828-1740

Youngstown, OH Area
Ph. (330) 726-8833
Fax (330) 726-0694

CANADA

Quebec Area
Ph. (603) 894-1146
Fax (603) 894-1149

Toronto Area
Ph. (905) 607-7600
Fax (905) 607-7602

Vancouver Area
Ph. (604) 531-0133
Fax (604) 531-0142

To view a map of the Vulcraft Sales Corporation Office nearest you, visit our website at www.vulcraft.com.

TABLE OF CONTENTS

VULCRAFT DESIGN NOTICE **4**

GENERAL INFORMATION **5**

A. Joist Design Commentary
   1. Vibration
   2. How to Specify Concentrated Loads & Other Non-Uniform Loads on Steel Joists
   3. Joist Moment of Inertia and Deflection
   4. End Anchorage for Uplift
   5. Recycled Content - LEED Program

K AND KCS SERIES **15**

A. General Information
B. K Series Specifications
C. K Series LRFD and ASD Load Tables
D. KCS Series LRFD and ASD Load Tables

ACCESSORIES AND DETAILS **59**

A. K Series Joist Substitutes
B. 2.5K Series and Loose Outriggers
C. K Series Top Chord Extensions and Extended Ends
D. K Series Extensions LRFD and ASD Load Tables
E. K Series Open web Steel Joists
F. LH and DLH Series Details

LH AND DLH SERIES **73**

A. General Information
B. LH and DLH Series Specifications
C. LH Series LRFD and ASD Load Tables
D. DLH Series LRFD and ASD Load Tables

JOIST GIRDERS **119**

A. General Information
B. Joist Girder Details
C. Bottom Chord Brace Tables
D. Joist Girders in Moment Resistant Frames
E. Joist Girder Specifications
F. Joist Girder LRFD and ASD Weight Tables

FIRE RESISTANCE RATINGS WITH STEEL JOIST AND JOIST GIRDERS **149**
ECONOMICAL JOIST GUIDE **159**
RECOMMENDED CODE OF STANDARD PRACTICE **171**
GLOSSARY **197**
OSHA SAFETY STANDARDS FOR STEEL ERECTION **203**
PUBLICATIONS **212**

FRONT COVER PICTURE

Birmingham Crossplex – Birmingham, Alabama

This 50-meter Olympic swimming pool utilizes the Vulcraft DLH series joist. The joists span over the pool at a length of 155 feet and have a depth of 120 inches. Covering the joists in this beautiful Natatorium is Vulcraft's 3 inch acoustical, 16-gauge metal roof deck. This is part of a state-of-the-art 750,000 square foot, multi-purpose athletic and meeting facility. This world class complex also boasts an oval hydraulic track featuring a Mondotrack surface that is one of only six in the United States and one of eight world-wide. Other Nucor products are highlighted throughout the complex, including massive 260 foot long, 23 foot deep structural trusses which utilize Nucor's diverse selection of wide-flange members.

VULCRAFT LOCATIONS

ALABAMA

7205 Gault Avenue N.
Fort Payne, Alabama 35967
P.O. Box 680169
Fort Payne, Alabama 35968
(256) 845-2460 • Fax: (256) 845-2823
email: sales@vulcraft-al.com

ISO 9001 Certified
ISO 14001 Certified
Joists & Deck

INDIANA

6610 County Road 60
P.O. Box 1000
St.Joe, Indiana 46785
(260) 337-1800 • Fax: (260) 337-1801
email: sales@vulcraft-in.com

ISO 9001 Certified
ISO 14001 Certified
Joists & Deck

NEBRASKA

1601 West Omaha Avenue
Norfolk, Nebraska 68701
P.O. Box 59
Norfolk, Nebraska 68702
(402) 644-8500 • Fax: (402) 644-8528
email: sales@vulcraft-ne.com

ISO 9001 Certified
ISO 14001 Certified
Joists & Deck

NEW YORK

5362 Railroad Street
P.O. Box 280
Chemung, New York 14825
(607) 529-9000 • Fax: (607) 529-9001
email: sales@vulcraft-ny.com

ISO 9001 Certified
ISO 14001 Certified
Joists & Deck

VULCRAFT LOCATIONS

SOUTH CAROLINA

1501 West Darlington Street
P.O. Box 100520
Florence, South Carolina 29501
(843) 662-0381 • Fax: (843) 662-3132
email: sales@vulcraft-sc.com

ISO 9001 Certified
ISO 14001 Certified
Joists & Deck

TEXAS

175 County Road 2345
P.O. Box 186
Grapeland, Texas 75844
(936) 687-4665 • Fax: (936) 687-4290
email: sales@vulcraft-tx.com

ISO 9001 Certified
ISO 14001 Certified
Joists & Deck

UTAH

1875 West Highway 13 South
P.O. Box 637
Brigham City, Utah 84302
(435) 734-9433 • Fax: (435) 723-5423
email: sales@vulcraft-ut.com

ISO 9001 Certified
ISO 14001 Certified
Joists

A WORD ABOUT QUALITY

In manufacturing steel joists, there can be no compromise on quality. Your business depends on it. Our reputation and success depends on it. As the largest manufacturer of steel joists and joists girders in the United States, a lot of buildings and a lot of people depend on Vulcraft for consistently high standards of quality that are demonstrated in reliable performance.

In the manufacturing of steel joists and joist girders, Vulcraft uses high quality steel. Welding to exact specifications is the key to making structurally sound joists — and the most critical step in the entire process. This being the case, all Vulcraft welders are qualified to American Welding Society standards. All welds are in accordance with the Steel Joist Institute's welding criteria and all Vulcraft joists are manufactured to meet the specified design loads of the specifying professional.

To further insure the precision and quality of every weld, every Vulcraft quality assurance inspector is also certified to these same high standards. Furthermore Vulcraft's quality assurance supervisors report directly to the engineering manager. Vulcraft also employs an ongoing program of mechanical testing that includes full scale load tests at every facility.

As the leading manufacturer of steel joists and joist girders in the United States, Vulcraft's reputation depends on successfully managed quality control programs. That's why quality is important at Vulcraft. You have our word on it.

NOTICE

Vulcraft, a Division of Nucor Corporation, has provided this catalog for use by engineers and architects in designing and using Vulcraft open web joists and open web girders. It includes all products available at the time of printing. Vulcraft reserves the right to change, revise or withdraw any products or procedures without notice.

The information presented in this catalog has been prepared in accordance with recognized engineering principles and is for general information only. While it is believed to be accurate, this information should not be used or relied upon for any specific application without competent professional examination and verification of its accuracy, suitability and applicability by an engineer, architect or other licensed professional.

Vulcraft is a manufacturer of open web steel joists, joist girders, floor deck and roof deck. Vulcraft employs a staff of engineers for the design, manufacture and marketing of its products. Vulcraft does not accept the responsibility as the design professional of record for any structure. Vulcraft accepts the delegation of the engineering responsibility only for the products it manufactures, provided the application and applicable loading for these products are specified by the design professional of record. Vulcraft provides engineering for the design of its products and does not displace the need on any project for a design professional of record.

FLOOR VIBRATION

Floor vibration occurs, in varying degrees, in all types of building construction. Unlike steady state vibration, which can be isolated, vibration due to human impact is inconsistent in amplitude and frequency and therefore, more difficult to control.

The Steel Joist Institute and Nucor Research and Development have studied this phenomenon for many years. Laboratory research has been performed and numerous buildings, exhibiting both good and bad characteristics, were tested using seismic recording instruments. AISC / CISC Steel Design Guide 11 (1997) discusses in detail methods for calculating vibrational properties for joist supported floors.

The vast majority of structures, including those utilizing steel joists, do not exhibit floor vibrations severe enough to be considered objectionable. However, human sensitivity to vibratory motion varies, and a satisfactory framing solution is dependent upon the sound judgment of qualified structural engineers.

DEFINITIONS

Floor vibration is measured in terms of acceleration amplitude, displacement amplitude, and frequency. These factors are not objectionable to all people at the same level since human sensitivity varies.

Acceleration amplitude is the maximum acceleration caused by a force excitation.

Displacement amplitude is the magnitude or total distance traveled by each oscillation of the vibration.

Frequency is the speed of the oscillations and is expressed in cycles per second or Hz.

Acceleration is the only vibration factor which humans can sense.

Damping is the rate of decay of amplitude.

The following observations, which were determined from research data to be beneficial in reducing vibration levels, are recommended only as a guide.

OPEN FLOOR AREAS are most subject to vibrational problems. Modern “electronic offices” tend to have lower live loading and damping, and hence can potentially be more prone to floor vibration. Partitions, file cabinets, book stacks, heavy furnishings and even crowds of people provide additional damping and minimize complaints.

THICKER FLOOR SLABS are an economical solution to floor vibration. Additional thickness increases floor system stiffness transverse to the joists, thus reducing the vibration. The additional mass of the system will reduce the objectionable vibration.

WIDER JOIST SPACINGS improve vibrational characteristics only when combined with thicker floor slabs. The resulting increase in joist size does not contribute significantly to the composite section. When used with a thicker slab, greater resistance to vibration can be achieved, and, since fewer pieces must be installed, may be more economical.

PARTITIONS introduce damping and usually eliminate vibration problems. They will be effective either above or below a floor as long as they are connected to the floor. Partitions below a joist supported floor ideally should be in direct contact with the steel deck. If partitions below a joist supported floor are in direct contact with the joists, the joist bottom chord and webs must be designed for such intermediate support conditions. Consideration should be given to potential changes in occupancy of a floor over the expected life expectancy of the building. Going from a paper office to an electronic office along with removal of partitions can cause unexpected vibration problems.

SUPPORT FRAMING BEAMS sometimes contribute to floor vibration. The natural frequency and amplitude for both the joist and supporting joist girders or hot-rolled girders need to be calculated. In this manner the resulting system acceleration or displacement and frequency can be determined from which the performance of the system can be predicted.

INCREASING JOIST STIFFNESS above that which is required by live load deflection may be beneficial. A higher frequency floor is generally a better floor for most applications. Increasing the stiffness of the steel joists themselves results in increasing the frequency and slightly decreasing the acceleration or displacement of the floor vibration.

BRIDGING of all standard types provide equal floor vibrational characteristics.

LONGER FLOOR SPANS have many advantages over shorter spans, both in construction cost and in vibrational response. Floor spans over 40 feet with a 2-1/2” thick concrete slab give a vibrational frequency in the 3 - 5 cycles per second range. There are many long spanning joist supported floors that perform satisfactorily. A careful evaluation should be made by the specifying professional determining predicted floor vibration properties.

PC-based software to evaluate vibration of joist supported floor systems is available from the

STEEL JOIST INSTITUTE
234 W. Cheves Street
Florence, SC 29501
phone (843) 407-4091

And

STRUCTURAL ENGINEERS, INC.
537 Wisteria Drive
Radford, VA 24141
phone (540) 731-3330

CONCLUSIONS:

Partitions usually eliminate vibration problems. When a floor area cannot have partitions, increasing the joist stiffness and/or increasing the slab thickness are the most economical and effective ways to reduce objectionable vibrations.

For more information refer to Steel Joist Institute Technical Digest No. 5 “Vibration of Steel Joist-Concrete Slab Floors”, and the AISC / CISC Steel Design Guide 11 “Floor Vibrations Due to Human Activity”.

HOW TO SPECIFY JOISTS FOR CONCENTRATED LOADS ON STEEL JOISTS

When specifying joists for concentrated loads, the specifying professional should first attempt to specify a larger standard joist or a KCS series joist. The joist specified must have adequate moment and shear resistance throughout the length of the joist.

The shear resistance of K or LH series joists varies throughout the length of the joist. The shear capacity of the joist must be checked at every location by use of a shear diagram showing the allowable shear envelope created by the uniform design load of the joist (given in the table), versus the actual shear diagram. This diagram can be easily drawn with free software (Vulcraft Assistant Program) available at our web site www.vulcraft.com. The following diagram is an example of a 40' joist with a 180 plf uniform load plus a concentrated load of 1900 lbs. at 17' from the left end.

In this case, using the developed 399 plf load, either a 30K10SP with an 11% stress reversal, or a standard 26KCS3 could be specified.

Web members have a 5% stress reversal reserve capacity. If a stress reversal is larger than 5%, clearly specify the stress reversal with the joists. All joists with special design requirements shall be suffixed with an "SP".

When a suitable K or KCS series joist cannot be specified, use the required moment and shear to select a LH series joist or use double joists to attain the required capacity. Note that LH series have deeper standard bearing depths than K or KCS series joists.

Regardless of whether K-series, KCS-series or LH-series joists are specified, it is important to note that even though sufficient shear and moment capacity are provided within the special joist, the localized bending of the chord members due to concentrated loading between panel points is not considered. The joist design generally presumes that all concentrated loads are to be applied at panel points. When this is not the case, the specifying professional must specify on the structural drawings of the contract documents that a field installed member be located at all concentrated loads not occurring at panel points (see detail below).

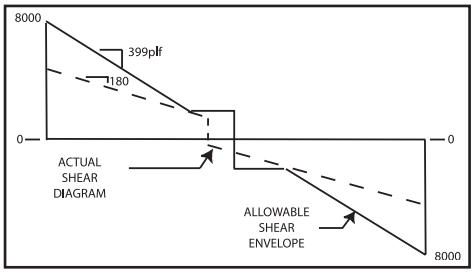

If the magnitude and locations of all loads are provided on the structural drawings, Vulcraft can design for the localized chord bending due to the load at the locations given.

The second alternative is the most economical.

VARYING UNIFORM LOADS ON STEEL JOISTS

The selection process of a joist for varying uniform loads such as drift loads or stepped uniform loads is essentially the same as that for concentrated loads. For K-series joists where the uniform load exceeds 550 pounds per lineal foot, the only options are: double joists or the use of special (SP) joists. Again a load diagram should be shown on the structural drawings.

DETAIL

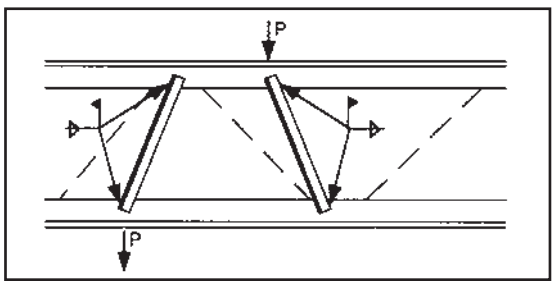

CONCENTRATED LOADS AT JOIST CHORDS

TYPICAL JOIST REINFORCEMENT AT CONCENTRATED LOADS

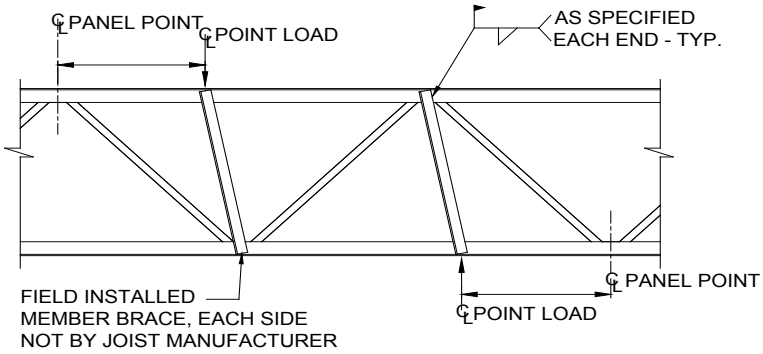

For nominal concentrated loads between panel points, which have been accounted for in the specified uniform design loads, a "strut" to transfer the load to a panel point on the opposite chord shall not be required, provided the sum of the concentrated loads within a chord panel does not exceed 100 pounds and the attachments are concentric to the chord.

Although standard **K-**Series, including **KCS-**Series, and standard **LH-**Series joists are designed specifically to support uniformly distributed loads applied to the top chord, research conducted by the Steel Joist Institute, using second-order inelastic analysis, has demonstrated that the localized accumulation of uniform design loads of up to 100 pounds within any top or bottom chord panel has a negligible effect on the overall performance of the joist, provided that the load is applied to both chord angles in a manner which does not induce torsion on the chords.

Concentrated loads in excess of 100 pounds or which do not meet the criteria outlined above must be applied at joist panel points or field strut members must be utilized as shown in the detail above.

Joist manufacturers can provide a specially designed joist with the capability to take point loads without the added members if this requirement and the exact location and magnitude of the loads are shown on the contract drawings. Also, the manufacturer can consider the worst case for both the shear and bending moment for a traveling load with no specific location. When a traveling load is specified, the contract drawings should indicate whether the load is to be applied at the top or bottom chord, and at any panel point, or at any point with the local bending effects considered. For additional information see SJI Code of Standard Practice, Section 2.3 – Specifying Design Loads.

JOIST MOMENT OF INERTIA AND DEFLECTION

The moment of inertia of **K-**Series and **LH/DLH-** series joists in the load table can be estimated using the following equations:

$I_J = 26.767\ (W)\ (L^3)\ (10^{-6})$ ASD, US Customary Units with W in plf and L = Span – 0.33 in feet

$I_J = 2.6953\ (W)\ (L^3)\ (10^{-5})$ ASD, Metric Units with W in kN/m and L = Span -102 in mm

The equations shown above provide an approximate "gross" moment of inertia, not including the effects of shear deformation. An open web steel joist can be expected to have approximately 15 percent more deformation than a solid web member. When a conventional beam formula is used to calculate joist deflection, a factor of 1.15 should be applied to account for the web shear deformation.

Example:

Find the Inertia for a 24K7 @ 40'-0":

SJI tables 253 / 148

$I_J = 26.767\ (W)\ (L^3)\ (10^{-6})$ where W = RED figure in the Load Table and L = (Span - 0.33) in feet.

$I_J = 26.767(148)\ (40 - 0.33)^3(10^{-6}) = 247\ in^4$

Compute Joist Deflection:

Increase deflection 15% to account for shear deformation in webs.

$(1.15)(5WL^4/384EI)$

$(1.15)(5)(148/12)\ [(40 - 0.33) \times 12)]^4\ /\ [(384)(29 \times 10^{-6})\ (247)] = 1.32"$

Verify the RED number represents the joist loading that produces L/360 deflection

L/360 = (40 - 0.33) x 12/360 = 1.32"

The 15 percent approximation also applies to the deflection equations when using the Joist Girder moment of Inertia equations.

For a Load/Load **LH-**Series joist type, the Weight Table includes an estimated moment of inertia value, so an equation is not needed for approximation.

END ANCHORAGE FOR UPLIFT

For wind uplift conditions it is the responsibility of the **specifying professional** to specify the wind uplift forces and the attachment of the joist or Joist Girder seat to the supporting element. It is the responsibility of the joist manufacturer to design the joist seat for the specified uplift. See Section 6.1(b) of the SJI Code of Standard Practice.

Welded Anchorage

The strength of the joist bearing seat for an uplift loading combination is a function of both the joist seat thickness and length of the end anchorage welds. The minimum end anchorage welds from the SJI Specifications may not develop the full capacity of the joist seat assembly for the specified uplift resistance. Where appropriate, a longer end anchorage weld length aids the joist manufacturer in providing an economical design of the joist bearing seat. The joist manufacturer will provide a seat of sufficient thickness and strength to resist the specified uplift end reaction.

To aid in the design and efficiency of the joist bearing seat, it is suggested that the minimum weld lengths of the Specification be increased by one inch whenever there is a net uplift load case, and there is sufficient bearing length to place the longer weld.
For a **K-**Series joist, the minimum weld size and length is (2) 1/8" x 2" long, and the minimum required bearing length (on steel) is 2-1/2". Where uplift is present and the bearing length is at least 3", specifying a one inch longer anchorage weld, (2) 1/8" x 3", will allow the joist manufacturer to engage more of the seat length for uplift resistance and provide a more economical seat design. For an **LH/DLH-**Series joist, SJI recommends the same as **K-**Series, to increase the weld length by 1". The minimum bearing lengths for **LH/DLH-** joists are such that there should be sufficient bearing length for the longer weld. Table 1 below demonstrates these suggestions.

TABLE 1

JOIST SERIES and SECTION NUMBER	MINIMUM FILLET WELD	SUGGESTED INCREASED WELD LENGTH
K-Series	(2) 1/8" x 2"	(2) 1/8" x 3" *
LH-Series, 02-06	(2) 3/16" x 2"	(2) 3/16" x 3"
LH/DLH-Series, 07-17	(2) 1/4" x 2"	(2) 1/4" x 3"
DLH-Series, 18-25	(2) 1/4" x 4"	

* The minimum bearing length on steel for K-Series joists is 2 1/2", so weld length should be increased only where bearing length is available.

Bolted Anchorage

Typically, joists and Joist Girders with bolted end anchorage also require a final connection by welding in order to provide lateral stability to the supporting member. However, only the bolts are relied on to provide uplift anchorage. The bolt type and diameter designated by the **specifying professional** shall provide sufficient tensile strength to resist the specified uplift end reaction. Higher strength bolts than the minimums required by the SJI Specification may be required.

If the bearing seats are detailed for a bolted connection, bolts shall be installed. If the bolts are not installed, an equivalent welded connection may be permitted by the **specifying professional**, provided the weld is deposited in the slot on the side farthest from the edge of the seat. Additional weld required to meet that specified for the welded connection shall be placed at a location on the seat away from the outer edge of the slot as shown in Figure 1.

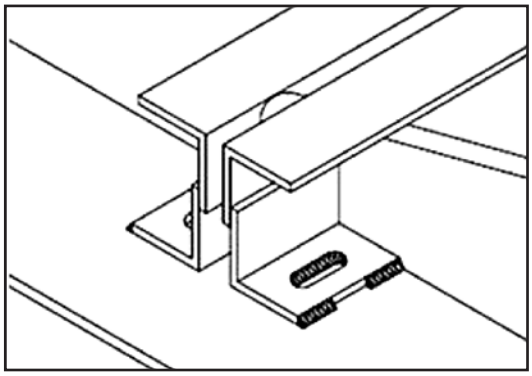

Figure 1

For additional information on uplift, see SJI Technical Digest 6.

2011 RECYCLED CONTENT OF NUCOR STEEL PRODUCTS FOR THE L.E.E.D.® PROGRAM

Nucor Corporation is the nation's largest recycler, using almost 19 million tons of scrap steel in 2011 to create new products. Nucor uses Electric Arc Furnace (EAF) technology at all of its steel producing facilities. EAFs use post-consumer scrap steel material as the major feedstock, unlike blast furnace operations that use mined iron ore as the major feedstock. Nucor has prepared the following information to help calculate the recycled content for products being used with "Green Building" applications or for projects in the LEED® program. These percentages are approximate and based on the total weight of the products. The calculations are based on 2011 scrap steel delivered and finished materials produced and are defined in accordance with ISO 14021:1999. More specific product information may be available from facility representatives.

RECYCLED CONTENT - LEED Version 2.2 Credit 4.1 & 4.2 and LEED V 3 Credit 4

2011 Recycled Steel Content of Nucor Products(*) (% by Total Weight)	
Product Group	**Average Recycled Content**
Nucor Bar Products	97.7%
Nucor Beam Products (and Nucor Castrip® Arkansas, LLC's sheet products)	80.1%
Nucor Plate Products	88.5%
Nucor Sheet Products	72.0%
Nucor Castrip® Crawfordsville, IN	94.0%
Total Nucor Steel Combined	**89.5%**
Vulcraft Structural Products	97.7%
Vulcraft Decking	72.0%
Nucor Building Group	89.5%
Nucor Fastener Products	97.7%
Nucor Wire Products	97.7%
Nucor Cold Finish	97.7%

REGIONAL MATERIALS - LEED Version 2.2 Credit 5.1 & 5.2 and LEED Version 3 Credit 5

Nucor tracks the origin of all scrap shipments to our mills. Nucor can approximate the amount of scrap extracted from any project site region. Nucor owns steel and steel products manufacturing facilities throughout the US that are offen within 500 miles of the project site. Please refer to the LEED Contact List (www.nucor.com/responsibility/environment/leed, then click on "Nucor Regional Material Contacts"), and contact the specific Nucor representative at the facility directly.

BAR MILL GROUP - Darlington, SC; Norfolk, NE; Jewett, TX; Plymouth, UT; Auburn, NY; Birmingham, AL; Kankakee, IL; Jackson, MS; Seattle, WA; Marion, OH; Memphis, TH; Kingman, AZ

2011 Approximate Recycled Steel Content of all Nucor Bar Mill Group Products(*)				
Facility	Total Scrap Steel Use	Total Alloys and Other Iron Units	Total Post-consumer Recycled Content	Total Pre-consumer/ Post- industrial Recycled Content
All	**97.7%**	**2.3%**	**81.1%**	**16.6%**

The Nucor Bar Mill Group produces rebar, angles, flats, rounds and other miscellaneous shapes.The bar mill group uses recycled scrap steel for over 97.7% of the feedstock.

SHEET MILL GROUP - Crawfordsville, IN; Hickman, AR; Huger, SC; Decatur, AL

2011 Approximate Recycled Steel Content of all Nucor Sheet Mill Group Products(*)				
Facility	Total Scrap Steel Use	Total Alloys and Other Iron Units	Total Post-consumer Recycled Content	Total Pre-consumer/ Post-industrial Recycled Content
Crawfordsville, IN	**83.9%**	**16.1%**	**69.6%**	**14.3%**
Nucor Castrip® Crawfordsville, IN	**94.0%**	**6.0%**	**78.4%**	**16.0%**
Hickman, AR	**73.7%**	**26.3%**	**61.1%**	**12.5%**
Berkeley, SC	**62.2%**	**37.8%**	**51.6%**	**10.6%**
Decatur, AL	**68.3%**	**31.7%**	**56.7%**	**11.6%**

The Nucor Sheet Mill Group produces hot band, cold rolled, pickled and galvanized products. Nucor Sheet mills use varying amounts of recycled materials depending on metallurgical product demands and market conditions. The combined sheet mill total recycled content is approximately 72.0%.

BAR MILL GROUP - Blytheville, AR; Huger, SC

2011 Approximate Recycled Steel Content of Beam Mill Products(*)				
Facility	Total Scrap Steel Use	Total Alloys and Other Iron Units	Total Post-consumer Recycled Content	Total Pre-consumer/ Post-industrial Recycled Content
Nucor Yamato Steel, Blytheville, AR and Nucor Castrip® Arkansas, LLC	**99.2%**	**0.8%**	**82.3%**	**16.9%**
Nucor Berkeley, Huger, SC	**61.0%**	**39.0%**	**50.6%**	**10.4%**

Nucor Beam mills produce narrow and wide flange structural beams. Nucor Yamato uses approximately 99.2% scrap steel for their feedstock. Nucor Castrip Arkansas, LLC uses steel melted at Nucor Yamato and products would be equivalent. Nucor Steel Berkeley uses a higher percentage of non-scrap iron due to metallurgical product demands for sheet steel produced using the same EAF's. The combined beam mill recycled content is approximately 80.1%.

PLATE GROUP - Hertford County, NC; Tuscaloosa, AL

2011 Approximate Recycled Steel Content of Plate Mill Products(*)				
Facility	Total Scrap Steel Use	Total Alloys and Other Iron Units	Total Post-consumer Recycled Content	Total Pre-consumer/ Post-industrial Recycled Content
Hertford County, NC	**99.6%**	**0.4%**	**82.7%**	**16.9%**
Tuscaloosa, AL	**77.4%**	**22.6%**	**64.3%**	**13.2%**

The Nucor Plate combined recycled content by weight is approximately 88.5%.

(*) Studies show that the recycled steel used for Nucor products consists of approximately 83% post-consumer scrap. The remaining 17% typically consists of pre-consumer scrap generated by manufacturing processes.

VULCRAFT GROUP - Florence, SC; Norfolk, NE; Brigham City, UT; Grapeland, TX; St. Joe, IN; Fort Payne, AL; Chemung, NY; Verco Decking, Inc. – Phoenix, AZ; Fontana, CA; Antioch, CA

JOISTS - The bar steel for Vulcraft joists is obtained from one of the eleven Nucor bar mills. That would mean that the average recycled content percentage for the Vulcraft group is 99.7%. The post consumer and pre consumer recycled content have been calculated to be approximately 81.1% and 16.6% respectively.

DECK – Steel for decking produced by Vulcraft facilities are typically obtained from one of the four Nucor sheet mills. That would mean that the Vulcraft deck products contain approximately 72.0% recycled steel. The post consumer and pre consumer recycled content have been calculated to be approximately 59.8% and 12.2% respectively. Verco Decking, Inc. may obtain steel from sources outside of Nucor that may contain lower amounts of recycled content; specific product information regarding Verco Decking, Inc. is available from facility representatives.

PRODUCTS GROUP

- **Nucor Building Group –**
  - **Nucor Building Systems** – Swansea, SC; Waterloo, IN; Terrell, TX; Brigham City, UT
  - **American Buildings Company** – Eufaula, AL; La Crosse, VA; Carson City, NV; El Paso, IL
  - **Kirby Building Systems** – Portland, TN
  - **Gulf States Manufacturer** – Starkville, MS
  - **CBC Steel** – St. Joe, IN
- **Nucor Fastener** – St. Joe, IN
- **Nucor Wire Products Pennsylvania** – New Salem, PA; **Nucor Steel Connecticut** – Wallingford, CT; **LMP Steel** –Maryville, MO
- **Nucor Cold Finish** – Milwaukee, WI; Darlington, SC; Brigham City, UT; Norfolk, NE
- **Nucor Steel Kingman**, LLC

Nucor Building Group (Including American Buildings Company, Kirby Building Systems, Gulf States Manufacturer and CBC Steel) – Nucor Building Group products may contain steel from all of the Nucor steel mills or obtain steel from outside of Nucor Corporation for their sheet, plate, bar and beam steel needs. The Nucor Building Systems, when using Nucor steel, contains an average of 89.5% total recycled content. The post and pre consumer recycled content was 74.3% and 15.2% respectively.

Nucor Fastener – Steel for Nucor fasteners is typically obtained from Nucor bar mills that use scrap steel as their feedstock. Some fasteners may contain high percentages of alloys that may reduce the total recycled content of the products, but Nucor Fastener products typically contain 97.7% recycled materials. That would mean that the post and pre consumer recycled content would be approximately 81.1% and 16.6% respectively.

Nucor Wire Products Pennsylvania, Nucor Connecticut, LMP Steel – Steel for wire is typically obtained from a Nucor bar mill that uses scrap as the feedstock. Nucor wire products, when using Nucor bar steel, would contain an average 97.7% recycled steel. The post and ore consumer recycled content was calculated to be approximately 81.1% and 16.6% respectively.

Nucor Cold Finish – Steel processed at Nucor Cold Finish is typically obtained from Nucor bar mills. The Nucor Cold Finish, when using Nucor steel, would contain an average amount of 97.7% recycled steel. The post and pre consumer recycled content was calculated to be approximately 81.1% and 16.6% respectively.

Nucor Steel Kingman, LLC – Steel for Nucor Steel Kingman, LLC products is typically obtained from Nucor bar mills that use scrap steel as their feedstock. Nucor Steel Kingman, LLC products would then typically contain 97.7% recycled materials. That would mean that the post and pre consumer recycled content would be approximately 81.1% and 16.1% respectively.

Additional information regarding specific recycled content of Nucor Corporation Products Group for a customer's specific order is available from facility representatives.

Additional information is available online through the Steel Recycling Institute at *http://www.recycle-steel.org.*

NOTES

ECONOMICAL HIGH STRENGTH DESIGN - Vulcraft K Series open web steel joists are designed in accordance with specifications of the Steel Joist Institute.

ACCESSORIES see page 63.

FOR TOP CHORD EXTENSIONS AND EXTENDED ENDS see page 60.

SJI SPANS TO 60'-0"

PAINT - Vulcraft joists receive a shop-coat of rust inhibitive primer whose performance characteristics conform to those of the Steel Joist Institute specifications 3.3.

SPECIFICATIONS see page 16.

KCS SERIES JOIST see page 54.

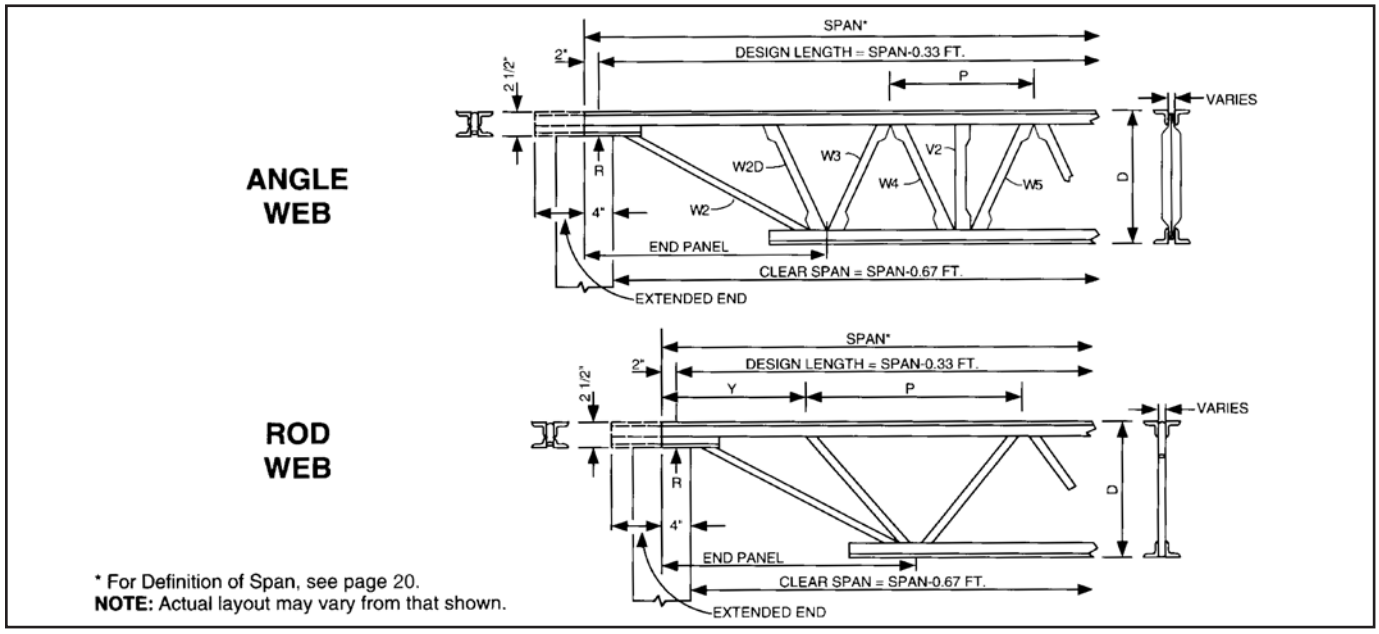

TABLE 2.7-1a

K-SERIES JOISTS
MAXIMUM JOIST SPACING FOR HORIZONTAL BRIDGING

JOIST SECTION NUMBER*	Bridging Force P_{br}	BRIDGING MATERIAL SIZE** Equal Leg Angles					
		1 x 7/64 (25 x 3 mm) r = 0.20" (5.08 mm)	**1-1/4 x 7/64 (32 x 3 mm) r = 0.25" (6.35 mm)**	**1-1/2 x 7/64 (38 x 3 mm) r = 0.30" (7.62 mm)**	**1-3/4 x 7/64 (45 x 3 mm) r = 0.35" (8.89 mm)**	**2 x 1/8 (52 x 3 mm) r = 0.40" (10.16 mm)**	**2-1/2 x 5/32 (64 x 4 mm) r = 0.50" (12.70 mm)**
	lbs (N)	ft.-in. (mm)	ft.-in. (mm)	ft.-in. (mm)	ft.-in. (mm)	ft.-in. (mm)	ft.-in. (mm)
1 to 8, incl.	340 (1512)	5'- 0" (1524)	6'- 3" (1905)	7'- 6" (2286)	8'- 7" (2616)	10'- 0" (3048)	12'- 6" (3810)
9 to 10, incl.	450 (2002)	4'- 4" (1321)	6'- 1" (1854)	7'- 6" (2286)	8'- 7" (2616)	10'- 0" (3048)	12'- 6" (3810)
11 to 12, incl.	560 (2491)	3'- 11" (1194)	5'- 6" (1676)	7'- 3" (2210)	8'- 7" (2616)	10'- 0" (3048)	12'- 6" (3810)

*Refer to last digit(s) of Joist Designation
**Connection to joist shall resist a nominal unfactored 700 pound force (3114 N)

TABLE 2.7-2

K, LH, and DLH SERIES JOISTS
MAXIMUM JOIST SPACING FOR DIAGONAL BRIDGING

JOIST DEPTH	BRIDGING ANGLE SIZE – (EQUAL LEG ANGLE)							
	1 x 7/64 r = 0.20"	1-1/4 x 7/64 r = 0.25"	1-1/2 x 7/64 r = 0.30"	1-3/4 x 7/64 r = 0.35"	2 x 1/8 r = 0.40"	2 ½ x 5/32 r = 0.50"	3 x 3/16 r = 0.60"	3 ½ x 1/4 r = 0.70"
in.	ft.- in.	ft.- in.	ft.- in.	ft.- in.	ft.- in.	ft.- in.	ft.- in.	ft.- in.
12"	6'-7"	8'-3"	9'-11"	11'-7"	13'-3"	16'-7"	19'-11"	23'-3"
14"	6'-6"	8'-3"	9'-11"	11'-7"	13'-3"	16'-7"	19'-11"	23'-3"
16"	6'-6"	8'-2"	9'-10"	11'-7"	13'-3"	16'-7"	19'-11"	23'-3"
18"	6'-6"	8'-2"	9'-10"	11'-6"	13'-3"	16'-7"	19'-11"	23'-3"
20"	6'-5"	8'-2"	9'-10"	11'-6"	13'-2"	16'-7"	19'-11"	23'-3"
22"	6'-4"	8'-1"	9'-10"	11'-6"	13'-2"	16'-6"	19'-11"	23'-3"
24"	6'-4"	8'-1"	9'-9"	11'-5"	13'-2"	16'-6"	19'-10"	23'-3"
26"	6'-3"	8'-0"	9'-9"	11'-5"	13'-1"	16'-6"	19'-10"	23'-2"
28"	6'-3"	8'-0"	9'-8"	11'-5"	13'-1"	16'-6"	19'-10"	23'-2"
30"	6'-2"	7'-11	9'-8"	11'-4"	13'-1"	16'-5"	19'-10"	23'-2"
32"	6'-1"	7'-10"	9'-7"	11'-4"	13'-0"	16'-5"	19'-9"	23'-2"
36"	5'-11"	7'-9"	9'-6"	11'-3"	12'-11"	16'-4"	19'-9"	23'-1"
40"	5'-9"	7'-7"	9'-5"	11'-2"	12'-10"	16'-4"	19'-8"	23'-1"
44"	5'-6"	7'-5"	9'-3"	11'-0"	12'-9"	16'-3"	19'-7"	23'-0"
48"	5'-4"	7'-3"	9'-2"	10'-11"	12'-8"	16'-2"	19'-7"	22'-11"
52"	5'-0"	7'-1"	9'-0"	10'-10"	12'-7"	16'-1"	19'-6"	22'-11"
56"	4'-9"	6'-10"	8'-10"	10'-8"	12'-5"	16'-0"	19'-5"	22'-10"
60"	4'-4"	6'-8"	8'-7"	10'-6"	12'-4"	15'-10"	19'-4"	22'-9"
64"	**	6'-4"	8 -5"	10'-4"	12'-2"	15'-9"	19'-3"	22'-8"
68"	**	6'-1"	8'-2"	10'-2"	12'-0"	15'-8"	19'-2"	22'-7"
72"	**	5'-9"	8'-0"	10'-0"	11'-10"	15'-6"	19'-1"	22'-6"
80"	**	5'-0"	7'-5"	9'-6"	11'-6"	15'-3"	18'-10"	22'-4"
88"		**	6'-9"	9'-0"	11'-1"	14'-11"	18'-7"	22'-1"
96"		**	6'-0"	8'-5"	10'-8"	14'-7"	18'-4"	21'-11"
104"			**	7'-9"	10'-1"	14'-2"	18'-0"	21'-8"
112"			**	7'-0"	9'-6"	13'-9"	17'-8"	21'-4"
120"				**	8'-9"	13'-4"	17'-3"	21'-1"

****INTERPOLATION BELOW THE MINIMUM VALUES SHOWN IS NOT ALLOWED.**
SEE TABLE 2.7-3 FOR MINIMUM JOIST SPACE FOR DIAGONAL ONLY BRIDGING.

STANDARD SPECIFICATION
FOR OPEN WEB STEEL JOISTS, K-SERIES

Adopted by the Steel Joist Institute November 4, 1985
Revised to May 18, 2010, Effective December 31, 2010

SECTION 1.
SCOPE AND DEFINITIONS

1.1 SCOPE

The *Standard Specification for Open Web Steel Joists,* **K**-*Series*, hereafter referred to as the Specification, covers the design, manufacture, application, and erection stability and handling of Open Web Steel Joists **K**-Series in buildings or other structures, where other structures are defined as those structures designed, manufactured, and erected in a manner similar to buildings. **K-**Series joists shall be designed using Allowable Stress Design (ASD) or Load and Resistance Factor Design (LRFD) in accordance with this Specification. Steel joists shall be erected in accordance with the Occupational Safety and Health Administration (OSHA), U.S. Department of Labor, Code of Federal Regulations 29CFR Part 1926 Safety Standards for Steel Erection, Section 1926.757 Open Web Steel Joists. The KCS joists; Joist Substitutes, **K**-Series; and Top Chord Extensions and Extended Ends, **K**-Series are included as part of this Specification.

This Specification includes Sections 1 through 6.

1.2 DEFINITION

The term "Open Web Steel Joists **K**-Series", as used herein, refers to open web, load-carrying members utilizing hot-rolled or cold-formed steel, including cold-formed steel whose yield strength has been attained by cold working, suitable for the direct support of floors and roof slabs or deck.

The **K**-Series Joists have been standardized in depths from 10 inches (254 mm) through 30 inches (762 mm), for spans up through 60 feet (18288 mm). The maximum total safe uniformly distributed load-carrying capacity of a **K**-Series Joist is 550 plf (8.02 kN/m) in ASD or 825 plf (12.03 kN/m) in LRFD.

The **K**-Series standard joist designations are determined by their nominal depth, followed by the letter **"K"**, and then by the chord size designation assigned. The chord size designations range from 01 to 12. Therefore, as a performance based specification, the **K**-Series standard joist designations listed in the following Standard Load Tables shall support the uniformly distributed loads as provided in the appropriate tables:

Standard LRFD Load Table Open Web Steel Joists, **K**-Series – U.S. Customary Units
Standard ASD Load Table Open Web Steel Joists, **K**-Series – U.S. Customary Units

And the following Standard Load Tables published electronically at www.steeljoist.org/loadtables

Standard LRFD Load Table Open Web Steel Joists, **K**-Series – S.I. Units
Standard ASD Load Table Open Web Steel Joists, **K**-Series – S.I. Units

Two standard types of **K**-Series Joists are designed and manufactured. These types are underslung (top chord bearing) or square-ended (bottom chord bearing), with parallel chords.

A **KCS** Joist shall be designed in accordance with this Specification based on an envelope of moment and shear capacity, rather than uniform load capacity, to support uniform plus concentrated loads or other non-uniform loads. The **KCS** Joists have been standardized in depths from 10 inches (254 mm) through 30 inches (762 mm), for spans up through 60 feet (18288 mm). The maximum total safe uniformly distributed load-carrying capacity of a **KCS** Joist is 550 plf (8.02 kN/m) in ASD or 825 plf (12.03 kN/m) in LRFD.

The **KCS** Joists standard designations are determined by their nominal depth, followed by the letters **"KCS"**, and then by the chord size designation assigned. The chord size designations range from 1 to 5. Therefore, as a performance based specification, the **KCS** Joists standard designations listed in the following Standard Load Tables shall provide the moment capacity and shear capacity as listed in the appropriate tables:

Standard LRFD Load Table for **KCS** Open Web Steel Joists – U.S. Customary Units
Standard ASD Load Table for **KCS** Open Web Steel Joists – U.S. Customary Units

And the following Standard Load Tables published electronically at www.steeljoist.org/loadtables

Standard LRFD Load Table for **KCS** Open Web Steel Joists – S.I. Units
Standard ASD Load Table for **KCS** Open Web Steel Joists – S.I. Units

A Joist Substitute, **K**-Series, shall be designed in accordance with this Specification to support uniform loads when the span is less than 10 feet (3048 mm) where an open web configuration becomes impractical. The Joist Substitutes, **K**-Series have been standardized as 2.5 inch (64 mm) deep sections for spans up through 10'-0" (3048 mm). The maximum total safe uniformly distributed load-carrying capacity of a Joist Substitute is 550 plf (8.02 kN/m) in ASD or 825 plf (12.03 kN/m) in LRFD.

The Joist Substitutes, **K**-Series standard designations are determined by their nominal depth, i.e. **2.5**, followed by the letter **"K"** and then by the chord size designation assigned. The chord size designations range from 1 to 3. Therefore, as a performance based specification, the Joist Substitutes, **K**-Series standard designations listed in the following Load Tables shall support the uniformly distributed loads as provided in the appropriate tables:

LRFD Simple Span Load Table for 2.5 Inch **K**-Series Joist Substitutes – U.S. Customary Units
ASD Simple Span Load Table for 2.5 Inch **K**-Series Joist Substitutes – U.S. Customary Units

LRFD Outriggers Load Table for 2.5 Inch **K**–Series Joist Substitutes – U.S. Customary Units
ASD Outriggers Load Table for 2.5 Inch **K**–Series Joist Substitutes – U.S. Customary Units

And the following Load Tables published electronically at www.steeljoist.org/loadtables

LRFD Simple Span Load Table for 64 mm **K**-Series Joist Substitutes – S.I. Units
ASD Simple Span Load Table for 64 mm **K**-Series Joist Substitutes – S.I. Units

LRFD Outriggers Load Table for 64 mm **K**-Series Joist Substitutes – S.I. Units
ASD Outriggers Load Table for 64 mm **K**-Series Joist Substitutes – S.I. Units

A Top Chord Extension or Extended End, **K-**Series, shall be a joist accessory that shall be designed in accordance with this Specification to support uniform loads when one or both ends of an underslung joist needs to be cantilevered beyond its bearing seat. The Top Chord Extensions and Extended Ends, **K**-Series have been standardized as an "S" Type (top chord angles extended only) and an "R" Type (top chord and bearing seat angles extended), respectively. The maximum total safe uniformly distributed load-carrying capacity of either an "R" or "S" Type extension is 550 plf (8.02 kN/m) in ASD or 825 plf (12.03 kN/m) in LRFD.

Standard designations for the "S" Type range from S1 to S12 for spans from 0'-6" to 4'-6" (152 to 1372 mm). Standard designations for the "R" Type range from R1 to R12 for spans from 0'-6" to 6'-0" (152 to 1829 mm). Therefore, as a performance based specification, the "S" Type Top Chord Extensions and "R" Type Extended Ends listed in the following Standard Load Tables shall support the uniformly distributed loads as provided in the appropriate tables:

LRFD Top Chord Extension Load Table (S Type) – U.S. Customary Units
ASD Top Chord Extension Load Table (S Type) – U.S. Customary Units

LRFD Top Chord Extension Load Table (R Type) – U.S. Customary Units
ASD Top Chord Extension Load Table (R Type) – U.S. Customary Units

And the following Standard Load Tables published electronically at www.steeljoist.org/loadtables

LRFD Top Chord Extension Load Table (S Type) – S.I. Units
ASD Top Chord Extension Load Table (S Type) – S.I. Units
LRFD Top Chord Extension Load Table (R Type) – S.I. Units
ASD Top Chord Extension Load Table (R Type) – S.I. Units

1.3 STRUCTURAL DESIGN DRAWINGS AND SPECIFICATIONS

The design drawings and specifications shall meet the requirements in the *Code of Standard Practice for Steel Joists and Joist Girders*, except for deviations specifically identified in the design drawings and/or specifications.

SECTION 2. REFERENCED SPECIFICATIONS, CODES AND STANDARDS

2.1 REFERENCES

American Institute of Steel Construction, Inc. (AISC)

ANSI/AISC 360-10 *Specification for Structural Steel Buildings*

American Iron and Steel Institute (AISI)

ANSI/AISI S100-2007 *North American Specification for Design of Cold-Formed Steel Structural Members*

ANSI/AISI S100-07/S1-09, *Supplement No. 1 to the North American Specification for the Design of Cold-Formed Steel Structural Members*, 2007 Edition

ANSI/AISI S100-07/S2-10, *Supplement No. 2 to the North American Specification for the Design of Cold-Formed Steel Structural Members*, 2007 Edition

American Society of Testing and Materials, ASTM International (ASTM)

ASTM A6/A6M-09, Standard Specification for General Requirements for Rolled Structural Steel Bars, Plates, Shapes, and Sheet Piling

ASTM A36/A36M-08, Standard Specification for Carbon Structural Steel

ASTM A242/242M-04 (2009), Standard Specification for High-Strength Low-Alloy Structural Steel

ASTM A307-07b, Standard Specification for Carbon Steel Bolts and Studs, 60 000 PSI Tensile Strength

ASTM A325/325M-09, Standard Specification for Structural Bolts, Steel, Heat Treated, 120/105 ksi [830 MPa] Minimum Tensile Strength

ASTM A370-09ae1, Standard Test Methods and Definitions for Mechanical Testing of Steel Products

ASTM A500/A500M-07, Standard Specification for Cold-Formed Welded and Seamless Carbon Steel Structural Tubing in Rounds and Shapes

ASTM A529/A529M-05, Standard Specification for High-Strength Carbon-Manganese Steel of Structural Quality

ASTM A572/A572M-07, Standard Specification for High-Strength Low-Alloy Columbium-Vanadium Structural Steel

ASTM A588/A588M-05, Standard Specification for High-Strength Low-Alloy Structural Steel, up to 50 ksi [345 MPa] Minimum Yield Point, with Atmoshperic Corrosion Resistance

ASTM A606/A606M-09, Standard Specification for Steel, Sheet and Strip, High-Strength, Low-Alloy, Hot-Rolled and Cold-Rolled, with Improved Atmospheric Corrosion Resistance

ASTM A992/A992M-06a, Standard Specification for Structural Steel Shapes

ASTM A1008/A1008M-09, Standard Specification for Steel, Sheet, Cold-Rolled, Carbon, Structural, High-Strength Low-Alloy and High-Strength Low-Alloy with Improved Formability, Solution Hardened, and Bake Hardenable

ASTM A1011/A1011M-09a, Standard Specification for Steel, Sheet and Strip, Hot-Rolled, Carbon, Structural, High-Strength Low-Alloy, High-Strength Low-Alloy with Improved Formability, and Ultra-High Strength

American Welding Society (AWS)

AWS A5.1/A5.1M-2004, Specification for Carbon Steel Electrodes for Shielded Metal Arc Welding

AWS A5.5/A5.5M:2006, Specification for Low-Alloy Steel Electrodes for Shielded Metal Arc Welding

AWS A5.17/A5.17M-97:R2007, Specification for Carbon Steel Electrodes and Fluxes for Submerged Arc Welding

AWS A5.18/A5.18M:2005, Specification for Carbon Steel Electrodes and Rods for Gas Shielded Arc Welding

AWS A5.20/A5.20M:2005, Specification for Carbon Steel Electrodes for Flux Cored Arc Welding

AWS A5.23/A5.23M:2007, Specification for Low-Alloy Steel Electrodes and Fluxes for Submerged Arc Welding

AWS A5.28/A5.28M:2005, Specification for Low-Alloy Steel Electrodes and Rods for Gas Shielded Arc Welding

AWS A5.29/A5.29M:2005, Specification for Low Alloy Steel Electrodes for Flux Cored Arc Welding

2.1 OTHER REFERENCES

The following are non-ANSI Standards documents and as such, are provided solely as sources of commentary or additional information related to topics in this Specification.

American Society of Civil Engineers (ASCE)

SEI/ASCE 7-10 *Minimum Design Loads for Buildings and Other Structures*

Federal Register, Department of Labor, Occupational Safety and Health Administration (2001), 29 CFR Part 1926 Safety Standards for Steel Erection; Final Rule, §1926.757 Open Web Steel Joists - January 18, 2001, Washington, D.C.

Steel Joist Institute (SJI)

SJI-COSP-2010, *Code of Standard Practice for Steel Joists and Joist Girders*

Technical Digest No. 3 (2007), *Structural Design of Steel Joist Roofs to Resist Ponding Loads*

Technical Digest No. 5 (1988), *Vibration of Steel Joist-Concrete Slab Floors*

Technical Digest No. 6 (2011), *Structural Design of Steel Joist Roofs to Resist Uplift Loads*

Technical Digest No. 8 (2008), *Welding of Open Web Steel Joists and Joist Girders*

Technical Digest No. 9 (2008), *Handling and Erection of Steel Joists and Joist Girders*

Technical Digest No. 10 (2003), *Design of Fire Resistive Assemblies with Steel Joists*

Technical Digest No. 11 (2007), *Design of Lateral Load Resisting Frames Using Steel Joists and Joist Girders*

Technical Digest No. 12 (2007), *Evaluation and Modification of Open-web Steel Joists and Joist Girders*

Steel Structures Painting Council (SSPC) (2000), *Steel Structures Painting Manual, Volume 2, Systems and Specifications*, Paint Specification No. 15, Steel Joist Shop Primer, May 1, 1999, Pittsburgh, PA.

SECTION 3.
MATERIALS

3.1 STEEL

The steel used in the manufacture of **K**-Series Joists shall conform to one of the following ASTM Specifications:

- Carbon Structural Steel, ASTM A36/A36M.
- High-Strength Low-Alloy Structural Steel, ASTM A242/A242M.
- Cold-Formed Welded and Seamless Carbon Steel Structural Tubing in Rounds and Shapes, ASTM A500/A500M.
- High-Strength Carbon-Manganese Steel of Structural Quality, ASTM A529/A529M.
- High-Strength Low-Alloy Columbium-Vanadium Structural Steel, ASTM A572/A572M.
- High-Strength Low-Alloy Structural Steel up to 50 ksi [345 MPa] Minimum Yield Point with Atmospheric Corrosion Resistance, ASTM A588/A588M.
- Steel, Sheet and Strip, High-Strength, Low-Alloy, Hot-Rolled and Cold-Rolled, with Improved Atmospheric Corrosion Resistance, ASTM A606/A606M.
- Structural Steel Shapes, ASTM A992/A992M.
- Steel, Sheet, Cold-Rolled, Carbon, Structural, High-Strength Low-Alloy, High-Strength Low-Alloy with Improved Formability, Solution Hardened, and Bake Hardenable, ASTM A1008/A1008M.
- Steel, Sheet and Strip, Hot-Rolled, Carbon, Structural, High-Strength Low-Alloy, High-Strength Low-Alloy with Improved Formability, and Ultra High Strength, ASTM A1011/A1011M.

or shall be of suitable quality ordered or produced to other than the listed specifications, provided that such material in the state used for final assembly and manufacture is weldable and is proved by tests performed by the producer or manufacturer to have the properties specified in Section 3.2.

3.2 MECHANICAL PROPERTIES

Steel used for **K-**Series Joists shall have a minimum yield strength determined in accordance with one of the procedures specified in this section, which is equal to the yield strength* assumed in the design.

> *The term "Yield Strength" as used herein shall designate the yield level of a material as determined by the applicable method outlined in paragraph 13.1 “Yield Point”, and in paragraph 13.2 “Yield Strength”, of ASTM A370, *Standard Test Methods and Definitions for Mechanical Testing of Steel Products*, or as specified in paragraph 3.2 of this specification.

Evidence that the steel furnished meets or exceeds the design yield strength shall, if requested, be provided in the form of an affidavit or by witnessed or certified test reports.

For material used without consideration of increase in yield strength resulting from cold forming, the specimens shall be taken from as-rolled material. In the case of material, the mechanical properties of which conform to the requirements of one of the listed specifications, the test specimens and procedures shall conform to those of such specifications and to ASTM A370.

In the case of material, the mechanical properties of which do not conform to the requirements of one of the listed specifications, the test specimens and procedures shall conform to the applicable requirements of ASTM A370, and the specimens shall exhibit a yield strength equal to or exceeding the design yield strength and an elongation of not less than (a) 20 percent in 2 inches (51 millimeters) for sheet and strip, or (b) 18 percent in 8 inches (203 millimeters) for plates, shapes and bars with adjustments for thickness for plates, shapes and bars as prescribed in ASTM A36/A36M, A242/A242M, A500/A500M, A529/A529M, A572/A572M, A588/A588M, A992/A992M whichever specification is applicable, on the basis of design yield strength.

The number of tests shall be as prescribed in ASTM A6/A6M for plates, shapes, and bars; and ASTM A606/A606M, A1008/A1008M and A1011/A1011M for sheet and strip.

If as-formed strength is utilized, the test reports shall show the results of tests performed on full section specimens in accordance with the provisions of the AISI North American Specifications for the Design of Cold-Formed Steel Structural Members. They shall also indicate compliance with these provisions and with the following additional requirements:

a) The yield strength calculated from the test data shall equal or exceed the design yield strength.

b) Where tension tests are made for acceptance and control purposes, the tensile strength shall be at least 8 percent greater than the yield strength of the section.

c) Where compression tests are used for acceptance and control purposes, the specimen shall withstand a gross shortening of 2 percent of its original length without cracking. The length of the specimen shall be not greater than 20 times the least radius of gyration.

d) If any test specimen fails to pass the requirements of the subparagraphs (a), (b), or (c) above, as applicable, two retests shall be made of specimens from the same lot. Failure of one of the retest specimens to meet such requirements shall be the cause for rejection of the lot represented by the specimens.

3.3 PAINT

The standard shop paint is intended to protect the steel for only a short period of exposure in ordinary atmospheric conditions and shall be considered an impermanent and provisional coating.

When specified, the standard shop paint shall conform to one of the following:

a) Steel Structures Painting Council Specification, SSPC No. 15.

b) Or, shall be a shop paint which meets the minimum performance requirements of the above listed specification.

SECTION 4.
DESIGN AND MANUFACTURE

4.1 METHOD

Joists shall be designed in accordance with this specification as simply-supported, trusses supporting a floor or roof deck so constructed as to brace the top chord of the joists against lateral buckling. Where any applicable design feature is not specifically covered herein, the design shall be in accordance with the following specifications:

a) Where the steel used consists of hot-rolled shapes, bars or plates use the American Institute of Steel Construction, *Specification for Structural Steel Buildings*.

b) For members which are cold-formed from sheet or strip steel, use the American Iron and Steel Institute, *North American Specification for the Design of Cold-Formed Steel Structural Members.*

Design Basis:

Steel joist designs shall be in accordance with the provisions in this Standard Specification using Load and Resistance Factor Design (LRFD) or Allowable Strength Design (ASD) as specified by the **specifying professional** for the project.

Loads, Forces and Load Combinations:

The loads and forces used for the steel joist design shall be calculated by the **specifying professional** in accordance with the applicable building code and specified and provided on the contract drawings.

The load combinations shall be specified by the **specifying professional** on the contract drawings in accordance with the applicable building code or, in the absence of a building code, the load combinations shall be those stipulated in SEI/ASCE 7. For LRFD designs, the load combinations in SEI/ASCE 7, Section 2.3 apply. For ASD designs, the load combinations in SEI/ASCE 7, Section 2.4 apply.

4.2 DESIGN AND ALLOWABLE STRESSES

Design Using Load and Resistance Factor Design (LRFD)

Joists shall have their components so proportioned that the required stresses, f_u, shall not exceed ϕF_n where

f_u = required stress ksi (MPa)
F_n = nominal stress ksi (MPa)
ϕ = resistance factor
ϕF_n = design stress

Design Using Allowable Strength Design (ASD)

Joists shall have their components so proportioned that the required stresses, f, shall not exceed F_n / Ω where

f = required stress ksi (MPa)
F_n = nominal stress ksi (MPa)
Ω = safety factor
F_n/Ω = allowable stress

Stresses:

For Chords: The calculation of design or allowable stress shall be based on a yield strength, F_y, of the material used in manufacturing equal to 50 ksi (345 MPa).

For all other joist elements: The calculation of design or allowable stress shall be based on a yield strength, F_y, of the material used in manufacturing, but shall not be less than 36 ksi (250 MPa) or greater than 50 ksi (345 MPa).

Note: Yield strengths greater than 50 ksi shall not be used for the design of any joist members.

(a) Tension: $\phi_t = 0.90$ (LRFD), $\Omega_t = 1.67$ (ASD)

$$\text{Design Stress} = 0.9F_y \text{ (LRFD)} \quad (4.2\text{-}1)$$

$$\text{Allowable Stress} = 0.6F_y \text{ (ASD)} \quad (4.2\text{-}2)$$

(b) Compression: $\phi_c = 0.90$ (LRFD), $\Omega_c = 1.67$ (ASD)

$$\text{Design Stress} = 0.9F_{cr} \text{ (LRFD)} \quad (4.2\text{-}3)$$

$$\text{Allowable Stress} = 0.6F_{cr} \text{ (ASD)} \quad (4.2\text{-}4)$$

For members with $k\ell/r \le 4.71\sqrt{E/QF_y}$

$$F_{cr} = Q\left[0.658^{\left(QF_y/F_e\right)}\right]F_y \qquad (4.2\text{-}5)$$

For members with $k\ell/r > 4.71\sqrt{E/QF_y}$

$$F_{cr} = 0.877F_e \qquad (4.2\text{-}6)$$

Where: F_e = Elastic buckling stress determined in accordance with Equation 4.2-7

$$F_e = \frac{\pi^2 E}{\left(k\ell/r\right)^2} \qquad (4.2\text{-}7)$$

In the above equations, ℓ is taken as the distance in inches (millimeters) between panel points for the chord members and the appropriate length for a compression or tension web member, and r is the corresponding least radius of gyration of the member or any component thereof. E is equal to 29,000 ksi (200,000 MPa).

For hot-rolled sections and cold formed angles, Q is the full reduction factor for slender compression members as defined in the AISC *Specification for Structural Steel Buildings* except that when the first primary compression web member is a crimped-end angle member, whether hot-rolled or cold formed:.

$$Q = [5.25/(w/t)] + t \le 1.0 \qquad (4.2\text{-}8)$$

Where: w = angle leg length, inches
t = angle leg thickness, inches

or,

$$Q = [5.25/(w/t)] + (t/25.4) \le 1.0 \qquad (4.2\text{-}9)$$

Where: w = angle leg length, millimeters
t = angle leg thickness, millimeters

For all other cold-formed sections the method of calculating the nominal compression strength is given in the AISI, *North American Specification for the Design of Cold-Formed Steel Structural Members*.

(c) Bending: $\phi_b = 0.90$ (LRFD), $\Omega_b = 1.67$ (ASD)

Bending calculations are to be based on using the elastic section modulus.

For chords and web members other than solid rounds: $F_n = F_y$

$$\text{Design Stress} = \phi_b F_n = 0.9F_y \quad \text{(LRFD)} \tag{4.2-10}$$

$$\text{Allowable Stress} = F_n/\Omega_b = 0.6F_y \quad \text{(ASD)} \tag{4.2-11}$$

For web members of solid round cross section: $F_n = 1.6\ F_y$

$$\text{Design Stress} = \phi_b F_n = 1.45F_y \quad \text{(LRFD)} \tag{4.2-12}$$

$$\text{Allowable Stress} = F_n/\Omega_b = 0.95F_y \quad \text{(ASD)} \tag{4.2-13}$$

For bearing plates used in joist seats: $F_n = 1.5\ F_y$

$$\text{Design Stress} = \phi_b F_n = 1.35F_y \quad \text{(LRFD)} \tag{4.2-14}$$

$$\text{Allowable Stress} = F_n/\Omega_b = 0.90F_y \quad \text{(ASD)} \tag{4.2-15}$$

(d) Weld Strength:

Shear at throat of fillet welds, flare bevel groove welds, partial joint penetration groove welds, and plug/slot welds:

$$\text{Nominal Shear Stress} = F_{nw} = 0.6F_{exx} \tag{4.2-16}$$

LRFD: $\phi_w = 0.75$

$$\text{Design Shear Strength} = \phi R_n = \phi_w F_{nw} A = 0.45F_{exx} A_w \tag{4.2-17}$$

ASD: $\Omega_w = 2.0$

$$\text{Allowable Shear Strength} = R_n/\Omega_w = F_{nw}A/\Omega_w = 0.3F_{exx} A_w \tag{4.2-18}$$

Made with E70 series electrodes or F7XX-EXXX flux-electrode combinations $F_{exx} = 70$ ksi (483 MPa)

Made with E60 series electrodes or F6XX-EXXX flux-electrode combinations $F_{exx} = 60$ ksi (414 MPa)

A_w = effective throat area, where:

For fillet welds, A_w = effective throat area, (other design methods demonstrated to provide sufficient strength by testing shall be permitted to be used);

For flare bevel groove welds, the effective weld area is based on a weld throat width, T, where:

$$T \text{ (inches)} = 0.12D + 0.11 \tag{4.2-19}$$

Where: D = web diameter, inches

or,

$$T \text{ (mm)} = 0.12D + 2.8 \tag{4.2-20}$$

Where: D = web diameter, mm

For plug/slot welds, A_w = cross-sectional area of the hole or slot in the plane of the faying surface provided that the hole or slot meets the requirements of the American Institute of Steel Construction *Specification for Structural Steel Buildings* (and as described in SJI Technical Digest No. 8, "Welding of Open-Web Steel Joists and Joist Girders").

Strength of resistance welds and complete-joint-penetration groove or butt welds in tension or compression (only when the stress is normal to the weld axis) is equal to the base metal strength:

$\phi_t = \phi_c = 0.90$ (LRFD) $\quad \Omega_t = \Omega_c = 1.67$ (ASD)

Design Stress = $0.9F_y$ (LRFD) (4.2-21)

Allowable Stress = $0.6F_y$ (ASD) (4.2-22)

4.3 MAXIMUM SLENDERNESS RATIOS

The slenderness ratios, 1.0 ℓ/r and 1.0 ℓ_s /r of members as a whole or any component part shall not exceed the values given in Table 4.3-1, Parts A.

The effective slenderness ratio, kℓ/r to be used in calculating the nominal stresses, F_{cr} and F'_e, is the largest value as determined from Table 4.3-1, Parts B and C.

In compression members when fillers or ties are used, they shall be spaced so that the ℓ_s/r_z ratio of each component does not exceed the governing ℓ/r ratio of the member as a whole. The terms used in Table 4.3-1 are defined as follows:

ℓ = length center-to-center of panel points, except ℓ = 36 inches (914 millimeters) for calculating ℓ/r_y of top chord member, in. (mm) or the appropriate length for a compression or tension web member, in. (mm).

ℓ_s = maximum length center-to-center between panel point and filler (tie), or between adjacent fillers (ties), in. (mm).

r_x = member radius of gyration in the plane of the joist, in. (mm).

r_y = member radius of gyration out of the plane of the joist, in. (mm).

r_z = least radius of gyration of a member component, in. (mm).

Compression web members are those web members subject to compressive axial loads under gravity loading.

Tension web members are those web members subject to tension axial loads under gravity loading, and which may be subject to compressive axial loads under alternate loading conditions, such as net uplift.

For top chords, the end panel(s) are the panels between the bearing seat and the first primary interior panel point comprised of at least two intersecting web members.

TABLE 4.3-1
MAXIMUM AND EFFECTIVE SLENDERNESS RATIOS

Description			$k\ell/r_x$	$K\ell/r_y$	$k\ell/r_z$	$k\ell_s/r_z$
I	TOP CHORD INTERIOR PANELS					
	A.	The slenderness ratios, $1.0\ell/r$ and $1.0\ell_s/r$, of members as a whole or any component part shall not exceed 90.				
	B.	The effective slenderness ratio, $k\ell/r$, to determine F_{cr} where k is:				
		1. With fillers or ties	1.0	0.94	---	1.0
		2. Without fillers or ties	---	---	1.0	---
		3. Single component members	1.0	0.94	---	---
	C.	For bending, the effective slenderness ratio, $k\ell/r$, to determine F'_e where k is:				
			1.0	---	---	---
II	TOP CHORD END PANELS, ALL BOTTOM CHORD PANELS					
	A.	The slenderness ratios, $1.0\ell/r$ and $1.0\ell_s/r$, of members as a whole or any component part shall not exceed 120 for Top Chords, or 240 for Bottom Chords.				
	B.	The effective slenderness ratio, $k\ell/r$, to determine F_{cr} where k is:				
		1. With fillers or ties	1.0	0.94	---	1.0
		2. Without fillers or ties	---	---	1.0	---
		3. Single component members	1.0	0.94	---	---
	C.	For bending, the effective slenderness ratio, $k\ell/r$, to determine F'_e where k is:				
			1.0	---	---	---
III	TENSION WEB MEMBERS					
	A.	The slenderness ratios, $1.0\ell/r$ and $1.0\ell_s/r$, of members as a whole or any component part shall not exceed 240.				
	B.	For end web members subject to compression, the effective slenderness ratio, $k\ell/r$, to determine F_{cr} where k is:				
		1. With fillers or ties	1.0	1.0	---	1.0
		2. Without fillers or ties	---	---	1.0	---
		3. Single component members	0.8	0.8	---	---
IV	COMPRESSION WEB MEMBERS					
	A.	The slenderness ratios, $1.0\ \ell/r$ and $1.0\ell_s/r$, of members as a whole or any component part shall not exceed 200.				
	B.	The effective slenderness ratio, $k\ell/r$, to determine F_{cr} where k is:				
		1. With fillers or ties	1.0	1.0	---	1.0
		2. Without fillers or ties	---	---	1.0	---
		3. Single component members	1.0	1.0	---	---

4.4 MEMBERS

(a) **Chords**

The bottom chord shall be designed as an axially loaded tension member.

The radius of gyration of the top chord about its vertical axis shall not be less than:

$$r_y \geq \ell_{br} \Big/ \left(124 + 0.67\, d_j + 28 \frac{d_j}{L} \right) \text{, in.} \qquad (4.4\text{-}1a)$$

$$r_y \geq \ell_{br} \Big/ \left(124 + 0.026\, d_j + 0.34 \frac{d_j}{L} \right) \text{, mm} \qquad (4.4\text{-}1b)$$

or,

$$r_y \geq \ell_{br} / 170 \qquad (4.4\text{-}2)$$

Where:

d_j is the steel joist depth, in. (mm)

L is the design length for the joist, ft. (m)

r_y is the out-of-plane radius of gyration of the top chord, in. (mm)

ℓ_{br} is the spacing in inches (millimeters) between lines of bridging as specified in Section 5.4(c).

The top chord shall be considered as stayed laterally by the floor slab or roof deck when attachments are in accordance with the requirements of Section 5.8(e) of these specifications.

The top chord shall be designed for only axial compressive stress when the panel length, ℓ, does not exceed 24 inches (609 mm). When the panel length exceeds 24 inches (609 mm), the top chord shall be designed as a continuous member subject to combined axial and bending stresses and shall be so proportioned that:

For **LRFD**:

at the panel point:

$$f_{au} + f_{bu} \leq 0.9 F_y \qquad (4.4\text{-}3)$$

at the mid panel:

for, $\dfrac{f_{au}}{\phi_c F_{cr}} \geq 0.2$,

$$\frac{f_{au}}{\phi_c F_{cr}} + \frac{8}{9} \left[\frac{C_m f_{bu}}{\left[1 - \left(\dfrac{f_{au}}{\phi_c F'_e} \right) \right] Q \phi_b F_y} \right] \leq 1.0 \qquad (4.4\text{-}4)$$

for, $\frac{f_{au}}{\phi_c F_{cr}} < 0.2$,

$$\left(\frac{f_{au}}{2\phi_c F_{cr}}\right) + \left[\frac{C_m f_{bu}}{\left[1-\left(\frac{f_{au}}{\phi_c F'_e}\right)\right] Q \phi_b F_y}\right] \le 1.0 \qquad (4.4\text{-}5)$$

f_{au} = P_u/A = Required compressive stress, ksi (MPa)
P_u = Required axial strength using LRFD load combinations, kips (N)
f_{bu} = M_u/S = Required bending stress at the location under consideration, ksi (MPa)
M_u = Required flexural strength using LRFD load combinations, kip-in. (N-mm)
S = Elastic Section Modulus, $in.^3$ (mm^3)
F_{cr} = Nominal axial compressive stress in ksi (MPa) based on ℓ/r as defined in Section 4.2(b),
C_m = 1 - 0.3 $f_{au}/\phi F'_e$ for end panels
C_m = 1 - 0.4 $f_{au}/\phi F'_e$ for interior panels
F_y = Specified minimum yield strength, ksi (MPa)
F'_e = $\frac{\pi^2 E}{(K\ell/r_x)^2}$, ksi (MPa)

Where ℓ is the panel length, in inches (millimeters), as defined in Section 4.2(b) and r_x is the radius of gyration about the axis of bending.

Q = Form factor defined in Section 4.2(b)
A = Area of the top chord, $in.^2$ (mm^2)

For **ASD**:

at the panel point:

$$f_a + f_b \le 0.6F_y \qquad (4.4\text{-}6)$$

at the mid panel:

for, $\frac{f_a}{F_a} \ge 0.2$,

$$\frac{f_a}{F_a} + \frac{8}{9}\left[\frac{C_m f_b}{\left[1-\left(\frac{1.67 f_a}{F'_e}\right)\right] Q F_b}\right] \le 1.0 \qquad (4.4\text{-}7)$$

for $\frac{f_a}{F_a} < 0.2$,

$$\left(\frac{f_a}{2F_a}\right) + \left[\frac{C_m f_b}{\left[1-\left(\frac{1.67 f_a}{F'_e}\right)\right] Q F_b}\right] \le 1.0 \qquad (4.4\text{-}8)$$

f_a = P/A required compressive stress, ksi (MPa)
P = Required axial strength using ASD load combinations, kips (N)
f_b = M/S = required bending stress at the location under consideration, ksi (MPa)
M = Required flexural strength using ASD load combinations, k-in (N-mm)
F_a = Allowable axial compressive stress based on ℓ/r as defined in Section 4.2(b), ksi (MPa)
F_b = Allowable bending stress; $0.6F_y$, ksi (MPa)
C_m = 1 - 0.50 f_a/F'_e for end panels
C_m = 1 - 0.67 f_a/F'_e for interior panels

The top chord and bottom chord shall be designed such that at each joint:

$$f_{vmod} \le \phi_v f_n \qquad \text{(LRFD, } \phi = 1.00\text{)} \qquad (4.4\text{-}9)$$

$$f_{vmod} \le f_n/\Omega_v \qquad \text{(ASD, } \Omega = 1.50\text{)} \qquad (4.4\text{-}10)$$

Where:

f_n = nominal shear stress = $0.6F_y$, ksi (MPa)
f_t = axial stress = P/A, ksi (MPa)
f_v = shear stress = V/bt, ksi (MPa)
f_{vmod} = modified shear stress = $\left(\frac{1}{2}\right)\left(f_t^2 + 4f_v^2\right)^{1/2}$
b = length of vertical part(s) of cross section, in. (mm)
t = thickness of vertical part(s) of cross section, in. (mm)

It shall not be necessary to design the top chord and bottom chord for the modified shear stress when a round bar web member is continuous through a joint. The minimum required shear Section 4.4(b) (25 percent of the end reaction) shall not be required when evaluating Equation 4.4-9 or 4.4-10.

KCS Joist chords shall be designed for a flat positive bending moment envelope where the moment capacity is constant at all interior panels. The top chord end panel(s) is designed for an axial load based on the force in the first tension web resulting from the specified shear. A uniform load of 550 plf (8020 N/m) in ASD or 825 plf (12030 N/m) in LRFD shall be used to check bending in the end panel(s).

(b) Web

The vertical shears to be used in the design of the web members shall be determined from full uniform loading, but such vertical shears shall be not less than 25 percent of the end reaction. Due consideration shall be given to the effect of eccentricity. The effect of combined axial compression and bending shall be investigated using the provisions of Section 4.4(a), letting C_m = 0.4 when bending due to eccentricity produces reversed curvature.

Interior vertical web members used in modified Warren type web systems shall be designed to resist the gravity loads supported by the member plus an additional axial load of ½ of 1.0 percent of the top chord axial force.

KCS Joist web forces shall be determined based on a flat shear envelope. All webs shall be designed for a vertical shear equal to the specified shear capacity. In addition, all webs shall be designed for 100 percent stress reversal except for the first tension web which will remain in tension under all simple span gravity loads.

(c) Joist Extensions

Joist extensions are defined as one of three types, top chord extensions (TCX), extended ends, or full depth cantilevers.

Design criteria for joist extensions shall be specified using one of the following methods:

(1) A Top chord extension (TCX), extended end, or full depth cantilevered end shall be designed for the load from the Standard Load Tables based on the design length and designation of the specified joist. In the absence of other design information, the joist manufacturer shall design the joist extension for this loading as a default.

(2) A loading diagram shall be provided for the top chord extension, extended end, or full depth cantilevered end. The diagram shall include the magnitude and location of the loads to be supported, as well as the appropriate load combinations.

(3) Joist extensions shall be specified using extension designations found in the Top Chord Extension Load Table (S Type) for TCXs or the Top Chord Extension Load Table (R Type) for extended ends.

Any deflection requirements or limits due to the accompanying loads and load combinations on the joist extension shall be provided by the **specifying professional**, regardless of the method used to specify the extension. Unless otherwise specified, the joist manufacturer shall check the extension for the specified deflection limit under uniform live load acting simultaneously on both the joist base span and the extension.

The joist manufacturer shall consider the effects of joist extension loading on the base span of the joist. This includes carrying the design bending moment due to the loading on the extension into the top chord end panel(s), and the effect on the overall joist chord and web axial forces. In the case of a K-Series Standard Type 'R' Extended End or 'S' TCX, the design bending moment is defined as the tabulated extension section modulus (S) multiplied by the appropriate allowable (ASD) or design (LRFD) flexural stress.

Bracing of joist extensions shall be clearly indicated on the structural drawings.

4.5 CONNECTIONS

(a) Methods

Joist connections and splices shall be made by attaching the members to one another by arc or resistance welding or other accredited methods.

(1) Welded Connections

a) Selected welds shall be inspected visually by the manufacturer. Prior to this inspection, weld slag shall be removed.
b) Cracks are not acceptable and shall be repaired.
c) Thorough fusion shall exist between weld and base metal for the required design length of the weld; such fusion shall be verified by visual inspection.
d) Unfilled weld craters shall not be included in the design length of the weld.
e) Undercut shall not exceed 1/16 inch (2 mm) for welds oriented parallel to the principal stress.

f) The sum of surface (piping) porosity diameters shall not exceed 1/16 inch (2 mm) in any 1 inch (25 mm) of design weld length.

g) Weld spatter that does not interfere with paint coverage is acceptable.

(2) Welded Connections for Crimped-End Angle Web Members

The connection of each end of a crimped angle web member to each side of the chord shall consist of a weld group made of more than a single line of weld. The design weld length shall include, at minimum, an end return of two times the nominal weld size.

(3) Welding Program

Manufacturers shall have a program for establishing weld procedures and operator qualification, and for weld sampling and testing. (See Technical Digest 8 - Welding of Open Web Steel Joists and Joist Girders.)

(4) Weld Inspection by Outside Agencies (See Section 5.12 of this specification)

The agency shall arrange for visual inspection to determine that welds meet the acceptance standards of Section 4.5(a)(1) above. Ultrasonic, X-Ray, and magnetic particle testing are inappropriate for joists due to the configurations of the components and welds.

(b) Strength

(1) Joint Connections - Joint connections shall develop the maximum force due to any of the design loads, but not less than 50 percent of the strength of the member in tension or compression, whichever force is the controlling factor in the selection of the member.

(2) Shop Splices - Shop splices shall be permitted to occur at any point in chord or web members. Splices shall be designed for the member force, but not less than 50 percent of the member strength. All component parts comprising the cross section of the chord or web member (including reinforcing plates, rods, etc.) at the point of the splice, shall develop an ultimate tensile force of at least 1.2 times the product of the yield strength and the full design area of the chord or web. The “full design area” is the minimum required area such that the required stress will be less than the design (LRFD) or allowable (ASD) stress.

(c) Eccentricity

Members connected at a joint shall have their centroidal axes meet at a point whenever possible. Between joist ends where the eccentricity of a web member is less than 3/4 of the over-all dimension, measured in the plane of the web, of the largest member connected, the additional bending stress from this eccentricity shall be permitted to be neglected in the joist design. Otherwise, due consideration shall be given to the effect of eccentricity. The eccentricity of any web member shall be the perpendicular distance from the centroidal axis of that web member to the point on the centroidal axis of the chord which is vertically above or below the intersection of the centroidal axis of the web member(s) forming the joint. Joist ends shall be proportioned to resist bending produced by eccentricity at the support.

4.6 CAMBER

Joists shall have approximate camber in accordance with the following:

TABLE 4.6-1

Top Chord Length		Approximate Camber	
20'-0″	(6096 mm)	1/4″	(6 mm)
30'-0″	(9144 mm)	3/8″	(10 mm)
40'-0″	(12192 mm)	5/8″	(16 mm)
50'-0″	(15240 mm)	1″	(25 mm)
60'-0″	(18288 mm)	1 1/2″	(38 mm)

The **specifying professional** shall give consideration to coordinating joist camber with adjacent framing.

4.7 VERIFICATION OF DESIGN AND MANUFACTURE

(a) Design Calculations

Companies manufacturing **K-**Series Joists shall submit design data to the Steel Joist Institute (or an independent agency approved by the Steel Joist Institute) for verification of compliance with the SJI Specifications. Design data shall be submitted in detail and in the format specified by the Institute.

(b) Tests of Chord and Web Members

Each manufacturer shall, at the time of design review by the Steel Joist Institute, verify by tests that the design, in accordance with Sections 4.1 through 4.5 of this specification, will provide the theoretical strength of critical members. Such tests shall be evaluated considering the actual yield strength of the members of the test joists.

Material tests for determining mechanical properties of component members shall be conducted.

(c) Tests of Joints and Connections

Each manufacturer shall, at the time of design review by the Steel Joist Institute, verify by shear tests on representative joints of typical joists that connections will meet the provision of Section 4.5(b). Chord and web members shall be permitted to be reinforced for such tests.

(d) In-Plant Inspections

Each manufacturer shall verify their ability to manufacture **K**-Series Joists through periodic In-Plant Inspections. Inspections shall be performed by an independent agency approved by the Steel Joist Institute. The frequency, manner of inspection, and manner of reporting shall be determined by the Steel Joist Institute. The plant inspections are not a guarantee of the quality of any specific joists; this responsibility lies fully and solely with the individual manufacturer.

SECTION 5.
APPLICATION

5.1 USAGE

This specification shall apply to any type of structure where floors and roofs are to be supported directly by steel joists installed as hereinafter specified. Where joists are used other than on simple spans under uniformly distributed loading as prescribed in Section 4.1, they shall be investigated and modified when necessary to limit the required stresses to those listed in Section 4.2.

When a rigid connection of the bottom chord is to be made to a column or other structural support, the joist is then no longer simply supported, and the system shall be investigated for continuous frame action by the **specifying professional**. The magnitude and location of all loads and forces shall be provided on the structural drawings. The **specifying professional** shall design the supporting structure, including the design of columns, connections, and moment plates*. This design shall account for the stresses caused by lateral forces and the stresses due to connecting the bottom chord to the column or other structural support.

The designed detail of a rigid type connection and moment plates shall be shown on the structural drawings by the **specifying professional**. The moment plates shall be furnished by other than the joist manufacturer.

*For further reference, refer to Steel Joist Institute Technical Digest 11, "Design of Lateral Load Resisting Frames Using Steel Joists and Joist Girders."

5.2 SPAN

The span of a joist shall not exceed 24 times its depth.

5.3 END SUPPORTS

(a) Masonry and Concrete

A **K-**Series Joist end supported by masonry or concrete shall bear on steel bearing plates and shall be designed as steel bearing. Due consideration of the end reactions and all other vertical or lateral forces shall be taken by the **specifying professional** in the design of the steel bearing plate and the masonry or concrete. The ends of **K**-Series Joists shall extend a distance of not less than 4 inches (102 mm) over the masonry or concrete support unless it is deemed necessary to bear less than 4 inches (102 mm) over the support. Special consideration shall then be given to the design of the steel bearing plate and the masonry or concrete by the **specifying professional**. **K**-Series Joists shall be anchored to the steel bearing plate and shall bear a minimum of 2 1/2 inches (64 mm) on the plate.

The steel bearing plate shall be located not more than 1/2 inch (13 mm) from the face of the wall, otherwise special consideration shall then be given to the design of the steel bearing plate and the masonry or concrete by the **specifying professional**. When the **specifying professional** requires the joist reaction to occur at or near the centerline of the wall or other support, then a note shall be placed on the contract drawings specifying this requirement and the specified bearing seat depth shall be increased accordingly. If the joist reaction is to occur more than 2 1/2 inches (64 mm) from the face of the wall or other support, the minimum seat depth shall be 2 1/2 inches (64 mm) plus a dimension equal to the distance the joist reaction is to occur beyond 2 1/2 inches (64 mm).

The steel bearing plate shall not be less than 6 inches (152 mm) wide perpendicular to the length of the joist. The plate is to be designed by the **specifying professional** and shall be furnished by other than the joist manufacturer.

(b) Steel

Due consideration of the end reactions and all other vertical and lateral forces shall be taken by the **specifying professional** in the design of the steel support. The ends of **K**-Series Joists shall extend a distance of not less than 2 ½ inches (64 millimeters) over the steel supports.

5.4 BRIDGING

Top and bottom chord bridging is required and shall consist of one or both of the following types.

(a) Horizontal

Horizontal bridging shall consist of continuous horizontal steel members. The ratio of unbraced length to least radius of gyration, ℓ/r, of the bridging member shall not exceed 300, where ℓ is the distance in inches (mm) between attachments, and r is the least radius of gyration of the bridging member.

(b) Diagonal

Diagonal bridging shall consist of cross-bracing with a ℓ/r ratio of not more than 200, where ℓ is the distance in inches (millimeters) between connections and r is the least radius of gyration of the bracing member. Where cross-bracing members are connected at their point of intersection, the ℓ distance shall be taken as the distance in inches (millimeters) between connections at the point of intersection of the bracing members and the connections to the chord of the joists.

(c) Quantity and Spacing

Bridging shall be properly spaced and anchored to support the decking and the employees prior to the attachment of the deck to the top chord. The maximum spacing of lines of bridging, ℓ_{brmax} shall be the lesser of,

$$\ell_{brmax} = \left(124 + 0.67\,d_j + 28\frac{d_j}{L}\right) r_y \text{, in.} \qquad (5.4\text{-}1a)$$

$$\ell_{brmax} = \left(124 + 0.026\,d_j + 0.34\frac{d_j}{L}\right) r_y \text{, mm} \qquad (5.4\text{-}1b)$$

or,

$$\ell_{brmax} = 170\,r_y \qquad (5.4\text{-}2)$$

Where:

d_j is the steel joist depth, in. (mm)

L is the Joist Span length, ft. (m)

r_y is the out-of-plane radius of gyration of the top chord, in. (mm)

The number of rows of top chord bridging shall not be less than as shown in Bridging Tables 5.4-1 and 5.4-2 and the spacing shall meet the requirements of Equations 5.4-1 and 5.4-2. The number of rows of bottom chord bridging, including bridging required per Section 5.11, shall not be less than the number of top chord rows. Rows of bottom chord bridging are permitted to be spaced independently of rows of top chord bridging. The spacing of rows of bottom chord bridging shall meet the slenderness requirement of Section 4.3 and any specified strength requirements.

TABLE 5.4-1

NUMBER OF ROWS OF TOP CHORD BRIDGING**
Refer to the K-Series Load Table and Specification Section 6 for required bolted diagonal bridging.
Distances are Joist Span lengths in feet – See "Definition of Span" preceding Load Tables.

Section Number*	Joist Depth	One Row	Two Rows	Three Rows	**Four Rows**
#1	All	Up thru 17	Over 17 thru 26	Over 26 thru 28	
#2	All	Up thru 21	Over 21 thru 30	Over 30 thru 32	
#3	All	Up thru 18	Over 18 thru 26	Over 26 thru 40	
#4	All	Up thru 20	Over 20 thru 30	Over 30 thru 41	Over 41 thru 48
#5	12K to 24K	Up thru 20	Over 20 thru 30	Over 30 thru 42	Over 42 thru 48
	26K	Up thru 28	Over 28 thru 41	Over 41 thru 52	
#6	14K to 24K	Up thru 20	Over 20 thru 31	Over 31 thru 42	Over 42 thru 48
	26K & 28K	UP thru 28	Over 28 thru 41	Over 41 thru 54	Over 54 thru 56
#7	16K to 24K	Up thru 23	Over 23 thru 34	Over 34 thru 48	
	26K to 30K	Up thru 29	Over 29 thru 44	Over 44 thru 60	
#8	24K	Up thru 25	Over 25 thru 39	Over 39 thru 48	
	26K to 30K	Up thru 29	Over 29 thru 44	Over 44 thru 60	
#9	16K to 24K	Up thru 22	Over 22 thru 34	Over 34 thru 48	
	26K to 30K	Up thru 29	Over 29 thru 44	Over 44 thru 60	
#10	18K to 24K	Up thru 22	Over 22 thru 38	Over 38 thru 48	
	26K to 30K	Up thru 29	Over 29 thru 48	Over 48 thru 60	
#11	22K	Up thru 24	Over 24 thru 39	Over 39 thru 44	
	30K	Up thru 34	Over 34 thru 49	Over 49 thru 60	
#12	24K	Up thru 25	Over 25 thru 43	Over 43 thru 48	
	26K to 30K	Up thru 29	Over 29 thru 47	Over 47 thru 60	

*Last digit(s) of joist designation shown in Load Table
**See Section 5.11 for additional bridging required for uplift design.

TABLE 5.4-2

METRIC UNITS

NUMBER OF ROWS OF TOP CHORD BRIDGING**

Refer to the K-Series Load Table and Specification Section 6 for required bolted diagonal bridging.

Distances are Joist Span lengths in mm – See "Definition of Span" preceding Load Tables.

Section Number*	Joist Depth	One Row	Two Rows	Three Rows	**Four Rows**
#1	All	Up thru 5182	Over 5182 thru 7925	Over 7925 thru 8534	
#2	All	Up thru 6401	Over 6401 thru 9144	Over 9144 thru 9754	
#3	All	Up thru 5486	Over 5486 thru 7925	Over 7925 thru 12192	
#4	All	Up thru 6096	Over 6096 thru 9144	Over 9144 thru 12497	Over 12497 thru 14630
#5	12K to 24K	Up thru 6096	Over 6096 thru 9144	Over 9144 thru 12802	Over 12802 thru 14630
	26K	Up thru 8534	Over 8534 thru 12497	Over 12497 thru 15850	
#6	14K to 24K	Up thru 6096	Over 6096 thru 9449	Over 9449 thru 12802	Over 12802 thru 14630
	26K & 28K	Up thru 8534	Over 8534 thru 12497	Over 12497 thru 16459	Over 16459 thru 17069
#7	16K to 24K	Up thru 7010	Over 7010 thru 10363	Over 10363 thru 14630	
	26K to 30K	Up thru 8839	Over 8839 thru 13411	Over 13411 thru 18288	
#8	24K	Up thru 7620	Over 7620 thru 11887	Over 11887 thru 14630	
	26K to 30K	Up thru 8839	Over 8839 thru 13411	Over 13411 thru 18288	
#9	16K to 24K	Up thru 6706	Over 6706 thru 10363	Over 10363 thru 14630	
	26K to 30K	Up thru 8839	Over 8839 thru 13411	Over 13411 thru 18288	
#10	18K to 24K	Up thru 6706	Over 6706 thru 11582	Over 11582 thru 14630	
	26K to 30K	Up thru 8839	Over 8839 thru 14630	Over 14630 thru 18288	
#11	22K	Up thru 7315	Over 7315 thru 11887	Over 11887 thru 13411	
	30K	Up thru 10363	Over 10363 thru 14935	Over 14935 thru 18288	
#12	24K	Up thru 7620	Over 7620 thru 13106	Over 13106 thru 14630	
	26K to 30K	UP thru 8839	Over 8839 thru 14326	Over 14326 thru 18288	

*Last digit(s) of joist designation shown in Load Table

**See Section 5.11 for additional bridging required for uplift design.

(d) Sizing of Bridging

Horizontal and diagonal bridging shall be capable of resisting the nominal unfactored horizontal compressive force, P_{br} given in Equation 5.4-3.

$$P_{br} = 0.0025\, n\, A_t\, F_{construction}\text{, lbs (N)} \qquad (5.4\text{-}3)$$

Where:

n = 8 for horizontal bridging

n = 2 for diagonal bridging

A_t = cross sectional area of joist top chord, in.^{2} (mm^2)

$F_{construction}$ = assumed ultimate stress in top chord to resist construction loads

$$F_{construction} = \left(\frac{\pi^2 E}{\left(\frac{0.9\ell_{brmax}}{r_y} \right)^2} \right) \geq 12.2\,\text{ksi} \qquad (5.4\text{-}4a)$$

$$F_{construction} = \left(\frac{\pi^2 E}{\left(\frac{0.9\ell_{brmax}}{r_y} \right)^2} \right) \geq 84.1\,\text{MPa} \qquad (5.4\text{-}4b)$$

Where: E = Modulus of Elasticity of steel = 29,000 ksi (200,000 MPa) and $\frac{\ell_{brmax}}{r_y}$ is determined from Equations 5.4-1a, 5.4-1b or 5.4-2

The bridging nominal unfactored horizontal compressive forces, P_{br}, are summarized in Table 5.4-3.

TABLE 5.4-3

*Section Number	Horizontal P_{br} (n=8)		Diagonal P_{br} (n=2)	
	lbs	(N)	lbs	(N)
#1 thru #8	340	(1512)	85	(378)
#9, #10	450	(2002)	113	(503)
#11, #12	560	(2491)	140	(623)
*Last digit(s) of joist designation shown in Load Table				

(e) Connections

Attachments to the joist chords shall be made by welding or mechanical means and shall be capable of resisting the nominal (unfactored) horizontal force, P_{br}, of Equation 5.4-3, but not less 700 pounds (3114 N).

(f) Bottom Chord Bearing Joists

Where bottom chord bearing joists are utilized, a row of diagonal bridging shall be provided near the support(s). This bridging shall be installed and anchored before the hoisting cable(s) is released.

5.5 INSTALLATION OF BRIDGING

Bridging shall support the top and bottom chords against lateral movement during the construction period and shall hold the steel joists in the approximate position as shown on the joist placement plans.

The ends of all bridging lines terminating at walls or beams shall be anchored thereto.

5.6 BEARING SEAT ATTACHMENTS

(a) Masonry and Concrete

Ends of **K-**Series Joists resting on steel bearing plates on masonry or structural concrete shall be attached thereto with a minimum of two 1/8 inch (3 mm) fillet welds 2 inches (51 mm) long, or with two 1/2 inch (13 mm) ASTM - A307 bolts, or the equivalent.

(b) Steel

Ends of **K-**Series Joists resting on steel supports shall be attached thereto with a minimum of two 1/8 inch (3 mm) fillet welds 2 inches (51 mm) long, or with two 1/2 inch (13 mm) ASTM – A307 bolts, or the equivalent. When **K-**Series Joists are used to provide lateral stability to the supporting member, the final connection shall be made by welding or as designated by the **specifying professional**.

(c) Uplift

Where uplift forces are a design consideration, roof joists shall be anchored to resist such forces (Refer to Section 5.11 Uplift).

5.7 JOIST SPACING

Joists shall be spaced so that the loading on each joist does not exceed the design load (LRFD or ASD) for the particular joist designation and span as shown in the applicable load tables.

5.8 FLOOR AND ROOF DECKS

(a) Material

Floor and roof decks shall be permitted to consist of cast-in-place or pre-cast concrete or gypsum, formed steel, wood, or other suitable material capable of supporting the required load at the specified joist spacing.

(b) Thickness

Cast-in-place slabs shall be not less than 2 inches (51 mm) thick.

(c) Centering

Centering for cast-in-place slabs shall be permitted to be ribbed metal lath, corrugated steel sheets, paper-backed welded wire fabric, removable centering or any other suitable material capable of supporting the slab at the designated joist spacing.

Centering shall not cause lateral displacement or damage to the top chord of joists during installation or removal of the centering or placing of the concrete.

(d) Bearing

Slabs or decks shall bear uniformly along the top chords of the joists.

(e) Attachments

The spacing for slab or deck attachments along the joist top chord shall not exceed 36 inches (914 mm), and shall be capable of resisting a nominal (unfactored) lateral force of not less than 300 pounds (1335 N), i.e., 100 plf (1.46 kN/m).

(f) Wood Nailers

Where wood nailers are used, such nailers in conjunction with deck or slab shall be attached to the top chords of the joists in conformance with Section 5.8(e).

(g) Joist With Standing Seam Roofing or Laterally Unbraced Top Chords

When the roof system does not provide lateral stability for the joists in accordance with Section 5.8 (e), (i.e. as may be the case with standing seam roofs or extended skylights and openings) sufficient stability shall be provided to brace the joists laterally under the full design load. The compression chord shall resist the chord axial design force in the plane of the joist (i.e., x-x axis buckling) and out of the plane of the joist (i.e., y-y axis buckling). In any case where the attachment requirement of Section 5.8(e) is not achieved, out-of-plane strength shall be achieved by adjusting the bridging spacing and/or increasing the compression chord area and the y-axis radius of gyration. The effective slenderness ratio in the y-direction equals $0.94\ L/r_y$; where L is the bridging spacing in inches (millimeters). The maximum bridging spacing shall not exceed that specified in Section 5.4(c).

Horizontal bridging members attached to the compression chords and their anchorages shall be designed for a compressive axial force of $0.001nP + 0.004\ P\sqrt{n} \geq 0.0025nP$, where n is the number of joists between end anchors and P is the chord design force in kips (Newtons). The attachment force between the horizontal bridging member and the compression chord shall be 0.01P. Horizontal bridging attached to the tension chords shall be proportioned so that the slenderness ratio between attachments does not exceed 300. Diagonal bridging shall be proportioned so that the slenderness ratio between attachments does not exceed 200.

5.9 DEFLECTION

The deflection due to the design nominal live load shall not exceed the following:

Floors: 1/360 of span.
Roofs: 1/360 of span where a plaster ceiling is attached or suspended.
1/240 of span for all other cases.

The **specifying professional** shall give consideration to the effects of deflection and vibration* in the selection of joists.

*For further reference, refer to Steel Joist Institute Technical Digest 5, Vibration of Steel Joist-Concrete Slab Floors" and the Institute's Computer Vibration Program.

5.10 PONDING

The ponding investigation shall be performed by the **specifying professional**.

*For further reference, refer to Steel Joist Institute Technical Digest 3, “Structural Design of Steel Joist Roofs to Resist Ponding Loads” and the AISC Specification for Structural Steel Buildings.

5.11 UPLIFT

Where uplift forces due to wind are a design requirement, these forces shall be indicated on the contract drawings in terms of NET uplift in pounds per square foot (Pascals). The contract documents shall indicate if the net uplift is based upon LRFD or ASD. When these forces are specified, they shall be considered in the design of joists and/or bridging. A single line of **bottom chord** bridging shall be provided near the first bottom chord panel points whenever uplift due to wind forces is a design consideration.

*For further reference, refer to Steel Joist Institute Technical Digest 6, “Structural Design of Steel Joist Roofs to Resist Uplift Loads”.

5.12 INSPECTION

Joists shall be inspected by the manufacturer before shipment to verify compliance of materials and workmanship with the requirements of these specifications. If the purchaser wishes an inspection of the steel joists by someone other than the manufacturer's own inspectors, he shall be permitted to reserve the right to do so in his "Invitation to Bid" or the accompanying "Job Specifications".

Arrangements shall be made with the manufacturer for such inspection of the joists at the manufacturing shop by the purchaser's inspectors at purchaser's expense.

5.13 PARALLEL CHORD SLOPED JOISTS

The span of a parallel chord sloped joist shall be defined by the length along the slope. Minimum depth, load-carrying capacity, and bridging requirements shall be determined by the sloped definition of span. The Standard Load Table capacity shall be the component normal to the joist.

SECTION 6.
ERECTION STABILITY AND HANDLING*

When it is necessary for the erector to climb on the joists, extreme caution shall be exercised since unbridged joists may exhibit some degree of instability under the erector's weight.

(a) Stability Requirements

1) Before an employee is allowed on the steel joist: BOTH ends of joists at columns (or joists designated as column joists) shall be attached to its supports. For all other joists a minimum of one end shall be attached before the employee is allowed on the joist. The attachment shall be in accordance with Section 5.6 - End Anchorage.

   When a bolted seat connection is used for erection purposes, as a minimum, the bolts shall be snug tightened. The snug tight condition is defined as the tightness that exists when all plies of a joint are in firm contact. This shall be attained by a few impacts of an impact wrench or the full effort of an employee using an ordinary spud wrench.

2) On steel joists that do not require erection bridging as shown by the unshaded area of the Load Tables, only one employee shall be allowed on the steel joist unless all bridging is installed and anchored.

3) Where the span of the steel joist is within the red shaded area of the Load Table, the following shall apply:
   a) The row of bridging nearest the mid span of the steel joists shall be bolted diagonal erection bridging; and
   b) Hoisting cables shall not be released until this bolted diagonal erection bridging is installed and anchored, unless an alternate method of stabilizing the joist has been provided; and
   c) No more than one employee shall be allowed on these spans until all other bridging is installed and anchored.

4) When permanent bridging terminus points cannot be used during erection, additional temporary bridging terminus points are required to provide stability.

5) In the case of bottom chord bearing joists, the ends of the joist shall be restrained laterally per Section 5.4(f).

6) After the joist is straightened and plumbed, and all bridging is completely installed and anchored, the ends of the joists shall be fully connected to the supports in accordance with Section 5.6 - End Anchorage.

(b) Landing and Placing Loads

1) Except as stated in paragraphs 6(b)(3) and 6(b)(4) of this section, no "construction loads"[(1)] shall be allowed on the steel joists until all bridging is installed and anchored, and all joist bearing ends are attached.

2) During the construction period, loads placed on the steel joists shall be distributed so as not to exceed the capacity of the steel joists.

3) The weight of a bundle of joist bridging shall not exceed a total of 1000 pounds (454 kilograms). The bundle of joist bridging shall be placed on a minimum of 3 steel joists that are secured at one end. The edge of the bridging bundle shall be positioned within 1 foot (0.30 m) of the secured end.

4) No bundle of deck shall be placed on steel joists until all bridging has been installed and anchored and all joist bearing ends attached, unless the following conditions are met:
   a) The contractor has first determined from a qualified person and documented in a site-specific erection plan that the structure or portion of the structure is capable of supporting the load;
   b) The bundle of decking is placed on a minimum of 3 steel joists;
   c) The joists supporting the bundle of decking are attached at both ends;
   d) At least one row of bridging is installed and anchored;
   e) The total weight of the decking does not exceed 4000 pounds (1816 kilograms); and
   f) The edge of the decking shall be placed within 1 foot (0.30 meters) of the bearing surface of the joist end.

5) The edge of the construction load shall be placed within 1 foot (.30 meters) of the bearing surface of the joist end.

(c) Field Welding

1) All field welding shall be performed in accordance with the contract documents. Field welding shall not damage the joists.

2) On cold-formed members whose yield strength has been attained by cold working, and whose as-formed strength is used in the design, the total length of weld at any one point shall not exceed 50 percent of the overall developed width of the cold-formed section.

(d) Handling

Care shall be exercised at all times to avoid damage to the joists and accessories.

(e) Fall Arrest Systems

Steel joists shall not be used as anchorage points for a fall arrest system unless written direction to do so is obtained from a “qualified person” [(2)].

*For a thorough coverage of this topic, refer to SJI Technical Digest 9, "Handling and Erection of Steel Joists and Joist Girders."

[(1)] See Federal Register, Department of Labor, Occupational Safety and Health Administration (2001), 29 CFR Part 1926 Safety Standards for Steel Erection; Final Rule, §1926.757 Open Web Steel Joists - January 18, 2001, Washington, D.C. for definition of “construction load”.

[(2)] See Federal Register, Department of Labor, Occupational Safety and Health Administration (2001), 29 CFR Part 1926 Safety Standards for Steel Erection; Final Rule, §1926.757 Open Web Steel Joists - January 18, 2001, Washington, D.C. for definition of “qualified person”.

DEFINITION OF SPAN

(U. S. Customary Units)

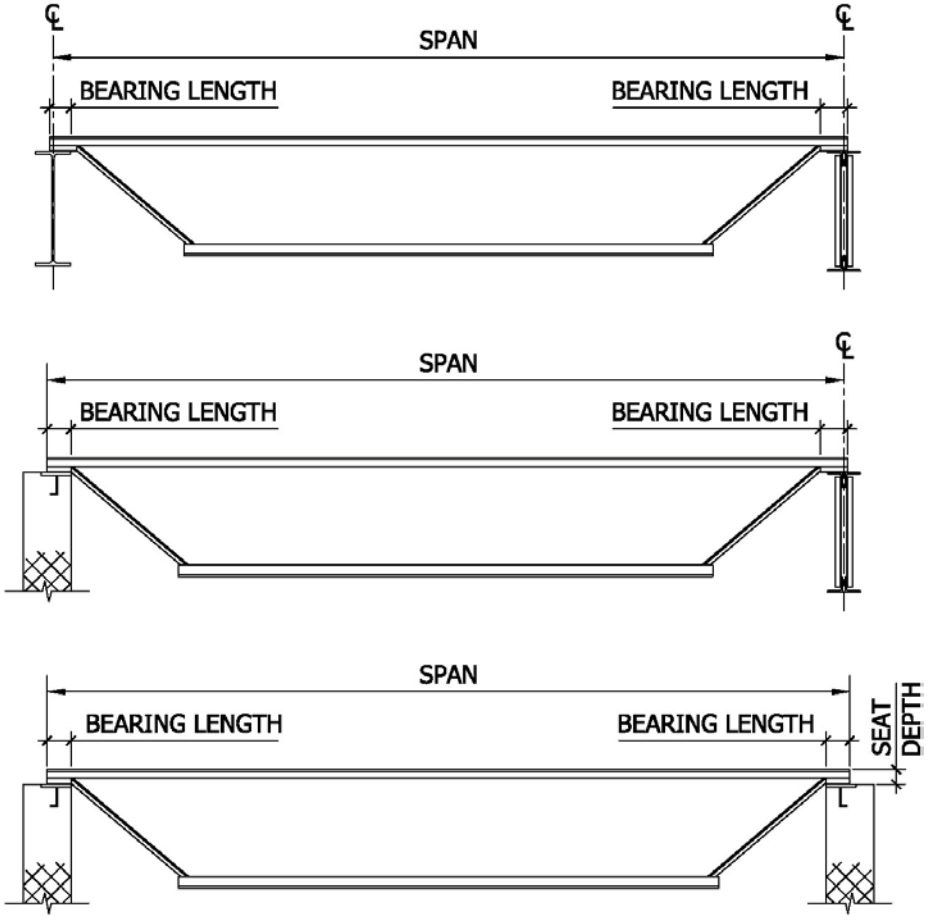

NOTES:

1) **DESIGN LENGTH = SPAN - 0.33 FT.**
2) **BEARING LENGTH FOR STEEL SUPPORTS SHALL NOT BE LESS THAN 2½ INCHES ; FOR MASONRY AND CONCRETE NOT LESS THAN 4 INCHES.**
3) **PARALLEL CHORD JOISTS INSTALLED TO A SLOPE GREATER THAN ½ INCH PER FOOT SHALL USE SPAN DEFINED BY THE LENGTH ALONG THE SLOPE.**

STANDARD LRFD LOAD TABLE

OPEN WEB STEEL JOISTS, K-SERIES

Based on a 50 ksi Maximum Yield Strength
Adopted by the Steel Joist Institute May 1, 2000
Revised to May 18, 2010 – Effective December 31, 2010

The **BLACK** figures in the Load Table give the TOTAL safe factored uniformly distributed load-carrying capacities, in pounds per linear foot, of **LRFD** **K**-Series Steel Joists.

The approximate joist weights, in pounds per linear foot, given in the Load Table may be added to the other building weights to determine the unfactored DEAD load. In all cases the factored DEAD load, including the joist self-weight, must be deducted from the TOTAL load to determine the factored LIVE load. The approximate joist weights do not include accessories.

The **RED** figures in the Load Table represent the unfactored uniform load, in pounds per linear foot, which will produce an approximate joist deflection of 1/360 of the span. This load can be linearly prorated to obtain the unfactored uniform load for supplementary deflection criteria (i.e. an unfactored uniform load which will produce a joist deflection of 1/240 of the span may be obtained by multiplying the **RED** figures by 360/240). In no case shall the prorated, unfactored load exceed the unfactored TOTAL load-carrying capacity of the joist as given in the Standard **ASD** Load Table for Open Web Steel Joists, **K**-Series.

Where the joist span is in the **RED** **SHADED** area of the Load Table, the row of bridging nearest the mid span shall be diagonal bridging with bolted connections at chords and intersections. Hoisting cables shall not be released until this row of bolted diagonal bridging is completely installed. The **RED** **SHADED** area extends up through 60'–0".

The approximate gross moment of inertia (not adjusted for shear deformation), in inches^4, of a standard joist listed in the Load Table may be determined as follows:

$I_j = 26.767(W)(L^3)(10^{-6})$, where W= **RED** figure in the Load Table, and
L = (span – 0.33) in feet.

The TOTAL safe factored uniformly distributed load-carrying capacities, in pounds per linear foot, of **LRFD** **K**-Series Steel Joists shall not exceed 825 plf for spans shorter than what is explicitly shown in the Load Table. The maximum prorated unfactored RED load shall not exceed 550 plf (the TOTAL load-carrying capacity of the joist as given in the Standard **ASD** Load Table for Open Web Steel Joists, **K**-Series).

Loads for span increments not explicitly given in the Load Table may be determined using linear interpolation between the load values given in adjacent span columns.

For the proper handling of concentrated and/or varying loads, see Section 2.3 in the Code of Standard Practice for Steel Joist and Joist Girders.

LRFD

STANDARD LOAD TABLE FOR OPEN WEB STEEL JOISTS, K-SERIES
Based On A 50 ksi Maximum Yield Strength - Loads Shown In Pounds Per Linear Foot (plf)

Joist Designation	10K1	12K1	12K3	12K5	14K1	14K3	14K4	14K6	16K2	16K3	16K4	16K5	16K6	16K7	16K9
Depth (in.)	10	12	12	12	14	14	14	14	16	16	16	16	16	16	16
Approx. Wt (lbs./ft.)	5.0	5.0	5.7	7.1	5.2	6.0	6.7	7.7	5.5	6.3	7.0	7.5	8.1	8.6	10.0
Span (ft.) ↓															
10	825 550														
11	825 542														
12	825 455	825 550	825 550	825 550											
13	718 363	825 510	825 510	825 510											
14	618 289	750 425	825 463	825 463	825 550	825 550	825 550	825 550							
15	537 234	651 344	814 428	825 434	766 475	825 507	825 507	825 507							
16	469 192	570 282	714 351	825 396	672 390	825 467	825 467	825 467	825 550	825 550	825 550	825 550	825 550	825 550	825 550
17	415 159	504 234	630 291	825 366	592 324	742 404	825 443	825 443	768 488	825 526	825 526	825 526	825 526	825 526	825 526
18	369 134	448 197	561 245	760 317	528 272	661 339	795 397	825 408	684 409	762 456	825 490	825 490	825 490	825 490	825 490
19	331 113	402 167	502 207	681 269	472 230	592 287	712 336	825 383	612 347	682 386	820 452	825 455	825 455	825 455	825 455
20	298 97	361 142	453 177	613 230	426 197	534 246	642 287	787 347	552 297	615 330	739 386	825 426	825 426	825 426	825 426
21		327 123	409 153	555 198	385 170	483 212	582 248	712 299	499 255	556 285	670 333	754 373	822 405	825 406	825 406
22		298 106	373 132	505 172	351 147	439 184	529 215	648 259	454 222	505 247	609 289	687 323	747 351	825 385	825 385
23		271 93	340 116	462 150	321 128	402 160	483 188	592 226	415 194	462 216	556 252	627 282	682 307	760 339	825 363
24		249 81	312 101	423 132	294 113	367 141	442 165	543 199	381 170	424 189	510 221	576 248	627 269	697 298	825 346
25					270 100	339 124	408 145	501 175	351 150	390 167	469 195	529 219	576 238	642 263	771 311
26					249 88	313 110	376 129	462 156	324 133	360 148	433 173	489 194	532 211	592 233	711 276
27					231 79	289 98	349 115	427 139	300 119	334 132	402 155	453 173	493 188	549 208	658 246
28					214 70	270 88	324 103	397 124	279 106	310 118	373 138	421 155	459 168	510 186	612 220
29									259 95	289 106	348 124	391 139	427 151	475 167	570 198
30									241 86	270 96	324 112	366 126	399 137	444 151	532 178
31									226 78	252 87	304 101	342 114	373 124	415 137	498 161
32									213 71	237 79	285 92	321 103	349 112	388 124	466 147

LRFD

STANDARD LOAD TABLE FOR OPEN WEB STEEL JOISTS, K-SERIES
Based On A 50 ksi Maximum Yield Strength - Loads Shown In Pounds Per Linear Foot (plf)

Joist Designation	18K3	18K4	18K5	18K6	18K7	18K9	18K10	20K3	20K4	20K5	20K6	20K7	20K9	20K10	22K4	22K5	22K6	22K7	22K9	22K10	22K11
Depth (In.)	18	18	18	18	18	18	18	20	20	20	20	20	20	20	22	22	22	22	22	22	22
Approx. Wt. (lbs./ft.)	6.4	7.2	7.7	8.4	8.9	10.1	11.6	6.5	7.2	7.7	8.4	8.9	10.1	11.6	7.3	7.7	8.5	9.0	10.2	11.7	11.9
Span (ft.) ↓																					
18	825	825	825	825	825	825	825														
	550	550	550	550	550	550	550														
19	771	825	825	825	825	825	825	825	825	825	825	825	825	825							
	494	523	523	523	523	523	523	550	550	550	550	550	550	550							
20	694	825	825	825	825	825	825	775	825	825	825	825	825	825							
	423	490	490	490	490	490	490	517	550	550	550	550	550	550							
21	630	759	825	825	825	825	825	702	825	825	825	825	825	825	825	825	825	825	825	825	825
	364	426	460	460	460	460	460	453	520	520	520	520	520	520	550	550	550	550	550	550	550
22	573	690	777	825	825	825	825	639	771	825	825	825	825	825	825	825	825	825	825	825	825
	316	370	414	438	438	438	438	393	461	490	490	490	490	490	548	548	548	548	548	548	548
23	523	630	709	774	825	825	825	583	703	793	825	825	825	825	777	825	825	825	825	825	825
	276	323	362	393	418	418	418	344	402	451	468	468	468	468	491	518	518	518	518	518	518
24	480	577	651	709	789	825	825	535	645	727	792	825	825	825	712	804	825	825	825	825	825
	242	284	318	345	382	396	396	302	353	396	430	448	448	448	431	483	495	495	495	495	495
25	441	532	600	652	727	825	825	493	594	669	729	811	825	825	657	739	805	825	825	825	825
	214	250	281	305	337	377	377	266	312	350	380	421	426	426	381	427	464	474	474	474	474
26	408	492	553	603	672	807	825	456	549	618	673	750	825	825	606	682	744	825	825	825	825
	190	222	249	271	299	354	361	236	277	310	337	373	405	405	338	379	411	454	454	454	454
27	378	454	513	558	622	747	825	421	508	573	624	694	825	825	561	633	688	768	825	825	825
	169	198	222	241	267	315	347	211	247	277	301	333	389	389	301	337	367	406	432	432	432
28	351	423	477	519	577	694	822	391	472	532	579	645	775	825	522	588	640	712	825	825	825
	151	177	199	216	239	282	331	189	221	248	269	298	353	375	270	302	328	364	413	413	413
29	327	394	444	483	538	646	766	364	439	495	540	601	723	825	486	547	597	664	798	825	825
	136	159	179	194	215	254	298	170	199	223	242	268	317	359	242	272	295	327	387	399	399
30	304	367	414	451	502	603	715	340	411	462	504	561	675	799	453	511	556	619	745	825	825
	123	144	161	175	194	229	269	153	179	201	218	242	286	336	219	245	266	295	349	385	385
31	285	343	387	421	469	564	669	318	384	433	471	525	631	748	424	478	520	580	697	825	825
	111	130	146	158	175	207	243	138	162	182	198	219	259	304	198	222	241	267	316	369	369
32	267	322	363	396	441	529	627	298	360	406	442	492	592	702	397	448	489	544	654	775	823
	101	118	132	144	159	188	221	126	147	165	179	199	235	276	180	201	219	242	287	337	355
33	252	303	342	372	414	498	589	280	339	381	415	463	556	660	373	421	459	511	615	729	798
	92	108	121	131	145	171	201	114	134	150	163	181	214	251	164	183	199	221	261	307	334
34	237	285	321	349	390	468	555	264	318	358	391	435	523	621	352	397	432	481	579	687	774
	84	98	110	120	132	156	184	105	122	137	149	165	195	229	149	167	182	202	239	280	314
35	223	268	303	330	367	441	523	249	300	339	369	411	493	585	331	373	408	454	546	648	741
	77	90	101	110	121	143	168	96	112	126	137	151	179	210	137	153	167	185	219	257	292
36	211	253	286	312	348	417	495	235	283	319	348	388	466	553	313	354	385	429	516	612	700
	70	82	92	101	111	132	154	88	103	115	125	139	164	193	126	141	153	169	201	236	269
37								222	268	303	330	367	441	523	297	334	364	406	487	579	663
								81	95	106	115	128	151	178	116	130	141	156	185	217	247
38								211	255	286	312	348	418	496	280	316	345	384	462	549	628
								74	87	98	106	118	139	164	107	119	130	144	170	200	228
39								199	241	271	297	330	397	471	267	300	327	364	438	520	595
								69	81	90	98	109	129	151	98	110	120	133	157	185	211
40								190	229	258	282	313	376	447	253	285	310	346	417	495	565
								64	75	84	91	101	119	140	91	102	111	123	146	171	195
41															241	271	295	330	396	471	538
															85	95	103	114	135	159	181
42															229	259	282	313	378	448	513
															79	88	96	106	126	148	168
43															219	247	268	300	360	427	489
															73	82	89	99	117	138	157
44															208	235	256	286	343	408	466
															68	76	83	92	109	128	146

LRFD

STANDARD LOAD TABLE FOR OPEN WEB STEEL JOISTS, K-SERIES
Based On A 50 ksi Maximum Yield Strength - Loads Shown In Pounds Per Linear Foot (plf)

Joist Designation	24K4	24K5	24K6	24K7	24K8	24K9	24K10	24K12	26K5	26K6	26K7	26K8	26K9	26K10	26K12
Depth (In.)	24	24	24	24	24	24	24	24	26	26	26	26	26	26	26
Approx. Wt. (lbs./ft.)	7.8	7.9	8.5	9.0	9.4	10.3	11.7	13.5	8.1	8.6	9.0	9.7	10.4	11.8	13.7
Span (ft.) ↓															
23	825 550	825 550	825 550	825 550	825 550	825 550	825 550	825 550							
24	780 516	825 544	825 544	825 544	825 544	825 544	825 544	825 544							
25	718 456	810 511	825 520	825 520	825 520	825 520	825 520	825 520	825 550	825 550	825 550	825 550	825 550	825 550	825 550
26	663 405	748 453	814 493	825 499	825 499	825 499	825 499	825 499	813 535	825 541	825 541	825 541	825 541	825 541	825 541
27	615 361	693 404	754 439	825 479	825 479	825 479	825 479	825 479	753 477	820 519	825 522	825 522	825 522	825 522	825 522
28	571 323	643 362	700 393	781 436	825 456	825 456	825 456	825 456	699 427	762 464	825 501	825 501	825 501	825 501	825 501
29	531 290	600 325	652 354	727 392	804 429	825 436	825 436	825 436	651 384	709 417	790 463	825 479	825 479	825 479	825 479
30	496 262	559 293	609 319	679 353	750 387	816 419	825 422	825 422	607 346	661 377	738 417	816 457	825 459	825 459	825 459
31	465 237	523 266	570 289	636 320	702 350	765 379	825 410	825 410	568 314	619 341	690 378	763 413	825 444	825 444	825 444
32	435 215	490 241	535 262	595 290	658 318	717 344	823 393	823 393	534 285	580 309	648 343	715 375	778 407	823 431	823 431
33	409 196	462 220	502 239	559 265	619 289	673 313	798 368	798 368	501 259	546 282	609 312	672 342	732 370	798 404	798 404
34	385 179	435 201	472 218	526 242	582 264	634 286	753 337	774 344	472 237	514 257	573 285	633 312	688 338	774 378	774 378
35	363 164	409 184	445 200	496 221	549 242	598 262	709 308	751 324	445 217	484 236	540 261	597 286	649 310	751 356	751 356
36	343 150	387 169	421 183	469 203	519 222	565 241	670 283	730 306	420 199	457 216	510 240	564 263	613 284	729 334	730 334
37	324 138	366 155	399 169	444 187	490 205	534 222	634 260	711 290	397 183	433 199	483 221	534 242	580 262	690 308	711 315
38	307 128	346 143	378 156	421 172	465 189	507 204	601 240	691 275	376 169	411 184	457 204	505 223	550 241	654 284	691 299
39	292 118	328 132	358 144	399 159	441 174	480 189	570 222	673 261	357 156	390 170	433 188	480 206	522 223	619 262	673 283
40	277 109	312 122	340 133	379 148	420 161	456 175	541 206	657 247	340 145	370 157	412 174	456 191	496 207	589 243	657 269
41	264 101	297 114	324 124	361 137	399 150	435 162	516 191	640 235	322 134	352 146	393 162	433 177	472 192	561 225	640 256
42	252 94	283 106	309 115	343 127	379 139	414 151	490 177	625 224	307 125	336 136	373 150	412 164	450 178	534 210	625 244
43	240 88	270 98	294 107	328 118	363 130	394 140	468 165	609 213	294 116	319 126	357 140	394 153	429 166	508 195	610 232
44	229 82	258 92	280 100	313 110	346 121	376 131	447 154	580 199	280 108	306 118	340 131	376 143	409 155	486 182	597 222
45	219 76	246 86	268 93	298 103	330 113	360 122	427 144	555 185	268 101	291 110	325 122	360 133	391 145	465 170	583 212
46	208 71	235 80	256 87	286 97	316 106	345 114	408 135	531 174	256 95	279 103	310 114	343 125	375 135	444 159	570 203
47	199 67	225 75	246 82	274 90	303 99	330 107	391 126	508 163	246 89	267 96	298 107	328 117	358 127	426 149	553 192
48	192 63	216 70	235 77	262 85	291 93	316 101	375 118	487 153	235 83	256 90	285 100	315 110	343 119	408 140	529 180
49									225 78	246 85	274 94	303 103	330 112	391 131	508 169
50									216 73	235 80	262 89	291 97	316 105	375 124	487 159
51									208 69	226 75	252 83	279 91	304 99	361 116	469 150
52									199 65	217 71	243 79	268 86	292 93	346 110	451 142

LRFD

STANDARD LOAD TABLE/OPEN WEB STEEL JOISTS, K-SERIES
Based On A 50 ksi Maximum Yield Strength - Loads Shown In Pounds Per Linear Foot (plf)

Joist Designation	28K6	28K7	28K8	28K9	28K10	28K12	30K7	30K8	30K9	30K10	30K11	30K12
Depth (In.)	28	28	28	28	28	28	30	30	30	30	30	30
Approx. Wt. (lbs./ft.)	8.9	9.2	9.8	10.5	11.8	14.5	9.6	10.0	10.6	11.9	13.3	15.0
Span (ft.) ↓												
27	825 550	825 550	825 550	825 550	825 550	825 550						
28	822 541	825 543	825 543	825 543	825 543	825 543						
29	766 486	825 522	825 522	825 522	825 522	825 522	825 550	825 550	825 550	825 550	825 550	825 550
30	715 439	796 486	825 500	825 500	825 500	825 500	825 543	825 543	825 543	825 543	825 543	825 543
31	669 397	745 440	825 480	825 480	825 480	825 480	801 508	825 520	825 520	825 520	825 520	825 520
32	627 361	699 400	772 438	823 463	823 463	823 463	751 461	823 500	823 500	823 500	823 500	823 500
33	589 329	657 364	726 399	790 432	798 435	798 435	706 420	780 460	798 468	798 468	798 468	798 468
34	555 300	618 333	684 364	744 395	774 410	774 410	664 384	735 420	774 441	774 441	774 441	774 441
35	523 275	583 305	645 333	702 361	751 389	751 389	627 351	693 384	751 415	751 415	751 415	751 415
36	495 252	550 280	609 306	663 332	730 366	730 366	592 323	654 353	712 383	730 392	730 392	730 392
37	468 232	522 257	576 282	627 305	711 344	711 344	559 297	619 325	673 352	711 374	711 374	711 374
38	444 214	493 237	546 260	594 282	691 325	691 325	531 274	586 300	639 325	691 353	691 353	691 353
39	420 198	469 219	519 240	564 260	670 306	673 308	504 253	556 277	606 300	673 333	673 333	673 333
40	399 183	445 203	492 222	535 241	636 284	657 291	478 234	529 256	576 278	657 315	657 315	657 315
41	379 170	424 189	468 206	510 224	606 263	640 277	454 217	502 238	547 258	640 300	640 300	640 300
42	361 158	403 175	445 192	486 208	576 245	625 264	433 202	480 221	522 240	619 282	625 284	625 284
43	345 147	385 163	426 179	463 194	550 228	610 252	414 188	457 206	498 223	591 263	610 270	610 270
44	330 137	367 152	406 167	442 181	525 212	597 240	394 176	436 192	475 208	564 245	597 258	597 258
45	315 128	351 142	388 156	423 169	501 198	583 229	376 164	417 179	454 195	538 229	583 246	583 246
46	301 120	336 133	372 146	405 158	480 186	570 219	361 153	399 168	435 182	516 214	570 236	570 236
47	288 112	321 125	355 136	387 148	459 174	558 210	345 144	382 157	415 171	493 201	558 226	558 226
48	276 105	309 117	340 128	370 139	441 163	547 201	331 135	366 148	399 160	472 188	543 215	547 216
49	265 99	295 110	327 120	355 130	423 153	535 193	318 127	351 139	382 150	454 177	520 202	535 207
50	255 93	283 103	313 113	342 123	405 144	525 185	304 119	337 130	367 141	436 166	499 190	525 199
51	244 88	273 97	301 106	328 115	390 136	507 175	292 112	324 123	352 133	418 157	480 179	514 192
52	235 83	262 92	289 100	315 109	375 128	487 165	282 106	312 116	339 126	402 148	462 169	504 184
53	226 78	252 87	279 95	304 103	360 121	469 156	271 100	300 109	327 119	387 140	444 159	495 177
54	217 74	243 82	268 89	292 97	348 114	451 147	261 94	288 103	313 112	373 132	427 150	486 170
55	210 70	234 77	259 85	282 92	334 108	435 139	252 89	277 98	303 106	360 125	412 142	468 161
56	202 66	226 73	249 80	271 87	322 102	420 132	243 84	268 92	292 100	346 118	397 135	451 153
57							234 80	259 88	282 95	334 112	384 128	435 145
58							226 76	250 83	271 90	322 106	370 121	420 137
59							219 72	241 79	262 86	312 101	358 115	406 130
60							211 69	234 75	253 81	301 96	346 109	393 124

STANDARD ASD LOAD TABLE

OPEN WEB STEEL JOISTS, K-SERIES

Based on a 50 ksi Maximum Yield Strength
Adopted by the Steel Joist Institute November 4, 1985
Revised to May 18, 2010 – Effective December 31, 2010

The **BLACK** figures in the Load Table give the TOTAL safe uniformly distributed load-carrying capacities, in pounds per linear foot, of **ASD** **K-**Series Steel Joists.

The approximate joist weights, in pounds per linear foot, given in the Load Table may be added to the other building weights to determine the DEAD load. In all cases the DEAD load, including the joist self-weight, must be deducted from the TOTAL load to determine the LIVE load. The approximate joist weights do not include accessories.

The **RED** figures in the Load Table represent the uniform load, in pounds per linear foot, which will produce an approximate joist deflection of 1/360 of the span. This load can be linearly prorated to obtain the uniform load for supplementary deflection criteria (i.e. a uniform load which will produce a joist deflection of 1/240 of the span may be obtained by multiplying the **RED** figure by 360/240). In no case shall the prorated load exceed the TOTAL load-carrying capacity of the joist.

Where the joist span is in the **RED** **SHADED** area of the Load Table, the row of bridging nearest the mid span shall be diagonal bridging with bolted connections at chords and intersections. Hoisting cables shall not be released until this row of bolted diagonal bridging is completely installed. The **RED** **SHADED** area extends up through 60'–0".

The approximate gross moment of inertia (not adjusted for shear deformation), in inches^4, of a standard joist listed in the Load Table may be determined as follows:

$I_j = 26.767(W)(L^3)(10^{-6})$, where W= **RED** figure in the Load Table, and
L = (span – 0.33) in feet.

The TOTAL safe uniformly distributed load-carrying capacities, in pounds per linear foot, of **ASD** **K-**Series Steel Joists shall not exceed 550 plf for spans shorter than what is explicitly shown in the Load Table. The maximum prorated RED load shall not exceed 550 plf (the TOTAL load-carrying capacity of the joist as given in the Standard **ASD** Load Table for Open Web Steel Joists, **K**-Series).

Loads for span increments not explicitly given in the Load Table may be determined using linear interpolation between the load values given in adjacent span columns.

For the proper handling of concentrated and/or varying loads, see Section 2.3 in the Code of Standard Practice for Steel Joist and Joist Girders.

ASD

STANDARD LOAD TABLE FOR OPEN WEB STEEL JOISTS, K-SERIES
Based on a 50 ksi Maximum Yield Strength - Loads Shown In Pounds Per Linear Foot (plf)

Joist Designation	10K1	12K1	12K3	12K5	14K1	14K3	14K4	14K6	16K2	16K3	16K4	16K5	16K6	16K7	16K9
Depth (in.)	10	12	12	12	14	14	14	14	16	16	16	16	16	16	16
Approx. Wt (lbs./ft.)	5.0	5.0	5.7	7.1	5.2	6.0	6.7	7.7	5.5	6.3	7.0	7.5	8.1	8.6	10.0
Span (ft.) ↓															
10	550 550														
11	550 542														
12	550 455	550 550	550 550	550 550											
13	479 363	550 510	550 510	550 510											
14	412 289	500 425	550 463	550 463	550 550	550 550	550 550	550 550							
15	358 234	434 344	543 428	550 434	511 475	550 507	550 507	550 507							
16	313 192	380 282	476 351	550 396	448 390	550 467	550 467	550 467	550 550	550 550	550 550	550 550	550 550	550 550	550 550
17	277 159	336 234	420 291	550 366	395 324	495 404	550 443	550 443	512 488	550 526	550 526	550 526	550 526	550 526	550 526
18	246 134	299 197	374 245	507 317	352 272	441 339	530 397	550 408	456 409	508 456	550 490	550 490	550 490	550 490	550 490
19	221 113	268 167	335 207	454 269	315 230	395 287	475 336	550 383	408 347	455 386	547 452	550 455	550 455	550 455	550 455
20	199 97	241 142	302 177	409 230	284 197	356 246	428 287	525 347	368 297	410 330	493 386	550 426	550 426	550 426	550 426
21		218 123	273 153	370 198	257 170	322 212	388 248	475 299	333 255	371 285	447 333	503 373	548 405	550 406	550 406
22		199 106	249 132	337 172	234 147	293 184	353 215	432 259	303 222	337 247	406 289	458 323	498 351	550 385	550 385
23		181 93	227 116	308 150	214 128	268 160	322 188	395 226	277 194	308 216	371 252	418 282	455 307	507 339	550 363
24		166 81	208 101	282 132	196 113	245 141	295 165	362 199	254 170	283 189	340 221	384 248	418 269	465 298	550 346
25					180 100	226 124	272 145	334 175	234 150	260 167	313 195	353 219	384 238	428 263	514 311
26					166 88	209 110	251 129	308 156	216 133	240 148	289 173	326 194	355 211	395 233	474 276
27					154 79	193 98	233 115	285 139	200 119	223 132	268 155	302 173	329 188	366 208	439 246
28					143 70	180 88	216 103	265 124	186 106	207 118	249 138	281 155	306 168	340 186	408 220
29									173 95	193 106	232 124	261 139	285 151	317 167	380 198
30									161 86	180 96	216 112	244 126	266 137	296 151	355 178
31									151 78	168 87	203 101	228 114	249 124	277 137	332 161
32									142 71	158 79	190 92	214 103	233 112	259 124	311 147

ASD

STANDARD LOAD TABLE FOR OPEN WEB STEEL JOISTS, K-SERIES
Based on a 50 ksi Maximum Yield Strength - Loads Shown In Pounds Per Linear Foot (plf)

Joist Designation	18K3	18K4	18K5	18K6	18K7	18K9	18K10	20K3	20K4	20K5	20K6	20K7	20K9	20K10	22K4	22K5	22K6	22K7	22K9	22K10	22K11
Depth (In.)	18	18	18	18	18	18	18	20	20	20	20	20	20	20	22	22	22	22	22	22	22
Approx. Wt. (lbs./ft.)	6.4	7.2	7.7	8.4	8.9	10.1	11.6	6.5	7.2	7.7	8.4	8.9	10.1	11.6	7.3	7.7	8.5	9.0	10.2	11.7	11.9
Span (ft.) ↓																					
18	550	550	550	550	550	550	550														
	550	550	550	550	550	550	550														
19	514	550	550	550	550	550	550	550	550	550	550	550	550	550							
	494	523	523	523	523	523	523	550	550	550	550	550	550	550							
20	463	550	550	550	550	550	550	517	550	550	550	550	550	550							
	423	490	490	490	490	490	490	517	550	550	550	550	550	550							
21	420	506	550	550	550	550	550	468	550	550	550	550	550	550	550	550	550	550	550	550	550
	364	426	460	460	460	460	460	453	520	520	520	520	520	520	550	550	550	550	550	550	550
22	382	460	518	550	550	550	550	426	514	550	550	550	550	550	550	550	550	550	550	550	550
	316	370	414	438	438	438	438	393	461	490	490	490	490	490	548	548	548	548	548	548	548
23	349	420	473	516	550	550	550	389	469	529	550	550	550	550	518	550	550	550	550	550	550
	276	323	362	393	418	418	418	344	402	451	468	468	468	468	491	518	518	518	518	518	518
24	320	385	434	473	526	550	550	357	430	485	528	550	550	550	475	536	550	550	550	550	550
	242	284	318	345	382	396	396	302	353	396	430	448	448	448	431	483	495	495	495	495	495
25	294	355	400	435	485	550	550	329	396	446	486	541	550	550	438	493	537	550	550	550	550
	214	250	281	305	337	377	377	266	312	350	380	421	426	426	381	427	464	474	474	474	474
26	272	328	369	402	448	538	550	304	366	412	449	500	550	550	404	455	496	550	550	550	550
	190	222	249	271	299	354	361	236	277	310	337	373	405	405	338	379	411	454	454	454	454
27	252	303	342	372	415	498	550	281	339	382	416	463	550	550	374	422	459	512	550	550	550
	169	198	222	241	267	315	347	211	247	277	301	333	389	389	301	337	367	406	432	432	432
28	234	282	318	346	385	463	548	261	315	355	386	430	517	550	348	392	427	475	550	550	550
	151	177	199	216	239	282	331	189	221	248	269	298	353	375	270	302	328	364	413	413	413
29	218	263	296	322	359	431	511	243	293	330	360	401	482	550	324	365	398	443	532	550	550
	136	159	179	194	215	254	298	170	199	223	242	268	317	359	242	272	295	327	387	399	399
30	203	245	276	301	335	402	477	227	274	308	336	374	450	533	302	341	371	413	497	550	550
	123	144	161	175	194	229	269	153	179	201	218	242	286	336	219	245	266	295	349	385	385
31	190	229	258	281	313	376	446	212	256	289	314	350	421	499	283	319	347	387	465	550	550
	111	130	146	158	175	207	243	138	162	182	198	219	259	304	198	222	241	267	316	369	369
32	178	215	242	264	294	353	418	199	240	271	295	328	395	468	265	299	326	363	436	517	549
	101	118	132	144	159	188	221	126	147	165	179	199	235	276	180	201	219	242	287	337	355
33	168	202	228	248	276	332	393	187	226	254	277	309	371	440	249	281	306	341	410	486	532
	92	108	121	131	145	171	201	114	134	150	163	181	214	251	164	183	199	221	261	307	334
34	158	190	214	233	260	312	370	176	212	239	261	290	349	414	235	265	288	321	386	458	516
	84	98	110	120	132	156	184	105	122	137	149	165	195	229	149	167	182	202	239	280	314
35	149	179	202	220	245	294	349	166	200	226	246	274	329	390	221	249	272	303	364	432	494
	77	90	101	110	121	143	168	96	112	126	137	151	179	210	137	153	167	185	219	257	292
36	141	169	191	208	232	278	330	157	189	213	232	259	311	369	209	236	257	286	344	408	467
	70	82	92	101	111	132	154	88	103	115	125	139	164	193	126	141	153	169	201	236	269
37								148	179	202	220	245	294	349	198	223	243	271	325	386	442
								81	95	106	115	128	151	178	116	130	141	156	185	217	247
38								141	170	191	208	232	279	331	187	211	230	256	308	366	419
								74	87	98	106	118	139	164	107	119	130	144	170	200	228
39								133	161	181	198	220	265	314	178	200	218	243	292	347	397
								69	81	90	98	109	129	151	98	110	120	133	157	185	211
40								127	153	172	188	209	251	298	169	190	207	231	278	330	377
								64	75	84	91	101	119	140	91	102	111	123	146	171	195
41															161	181	197	220	264	314	359
															85	95	103	114	135	159	181
42															153	173	188	209	252	299	342
															79	88	96	106	126	148	168
43															146	165	179	200	240	285	326
															73	82	89	99	117	138	157
44															139	157	171	191	229	272	311
															68	76	83	92	109	128	146

ASD

STANDARD LOAD TABLE FOR OPEN WEB STEEL JOISTS, K-SERIES
Based on a 50 ksi Maximum Yield Strength - Loads Shown In Pounds Per Linear Foot (plf)

Joist Designation	24K4	24K5	24K6	24K7	24K8	24K9	24K10	24K12	26K5	26K6	26K7	26K8	26K9	26K10	26K12
Depth (In.)	24	24	24	24	24	24	24	24	26	26	26	26	26	26	26
Approx. Wt. (lbs./ft.)	7.8	7.9	8.5	9.0	9.4	10.3	11.7	13.5	8.1	8.6	9.0	9.7	10.4	11.8	13.7
Span (ft.) ↓															
23	550	550	550	550	550	550	550	550							
	550	550	550	550	550	550	550	550							
24	520	550	550	550	550	550	550	550							
	516	544	544	544	544	544	544	544							
25	479	540	550	550	550	550	550	550	550	550	550	550	550	550	550
	456	511	520	520	520	520	520	520	550	550	550	550	550	550	550
26	442	499	543	550	550	550	550	550	542	550	550	550	550	550	550
	405	453	493	499	499	499	499	499	535	541	541	541	541	541	541
27	410	462	503	550	550	550	550	550	502	547	550	550	550	550	550
	361	404	439	479	479	479	479	479	477	519	522	522	522	522	522
28	381	429	467	521	550	550	550	550	466	508	550	550	550	550	550
	323	362	393	436	456	456	456	456	427	464	501	501	501	501	501
29	354	400	435	485	536	550	550	550	434	473	527	550	550	550	550
	290	325	354	392	429	436	436	436	384	417	463	479	479	479	479
30	331	373	406	453	500	544	550	550	405	441	492	544	550	550	550
	262	293	319	353	387	419	422	422	346	377	417	457	459	459	459
31	310	349	380	424	468	510	550	550	379	413	460	509	550	550	550
	237	266	289	320	350	379	410	410	314	341	378	413	444	444	444
32	290	327	357	397	439	478	549	549	356	387	432	477	519	549	549
	215	241	262	290	318	344	393	393	285	309	343	375	407	431	431
33	273	308	335	373	413	449	532	532	334	364	406	448	488	532	532
	196	220	239	265	289	313	368	368	259	282	312	342	370	404	404
34	257	290	315	351	388	423	502	516	315	343	382	422	459	516	516
	179	201	218	242	264	286	337	344	237	257	285	312	338	378	378
35	242	273	297	331	366	399	473	501	297	323	360	398	433	501	501
	164	184	200	221	242	262	308	324	217	236	261	286	310	356	356
36	229	258	281	313	346	377	447	487	280	305	340	376	409	486	487
	150	169	183	203	222	241	283	306	199	216	240	263	284	334	334
37	216	244	266	296	327	356	423	474	265	289	322	356	387	460	474
	138	155	169	187	205	222	260	290	183	199	221	242	262	308	315
38	205	231	252	281	310	338	401	461	251	274	305	337	367	436	461
	128	143	156	172	189	204	240	275	169	184	204	223	241	284	299
39	195	219	239	266	294	320	380	449	238	260	289	320	348	413	449
	118	132	144	159	174	189	222	261	156	170	188	206	223	262	283
40	185	208	227	253	280	304	361	438	227	247	275	304	331	393	438
	109	122	133	148	161	175	206	247	145	157	174	191	207	243	269
41	176	198	216	241	266	290	344	427	215	235	262	289	315	374	427
	101	114	124	137	150	162	191	235	134	146	162	177	192	225	256
42	168	189	206	229	253	276	327	417	205	224	249	275	300	356	417
	94	106	115	127	139	151	177	224	125	136	150	164	178	210	244
43	160	180	196	219	242	263	312	406	196	213	238	263	286	339	407
	88	98	107	118	130	140	165	213	116	126	140	153	166	195	232
44	153	172	187	209	231	251	298	387	187	204	227	251	273	324	398
	82	92	100	110	121	131	154	199	108	118	131	143	155	182	222
45	146	164	179	199	220	240	285	370	179	194	217	240	261	310	389
	76	86	93	103	113	122	144	185	101	110	122	133	145	170	212
46	139	157	171	191	211	230	272	354	171	186	207	229	250	296	380
	71	80	87	97	106	114	135	174	95	103	114	125	135	159	203
47	133	150	164	183	202	220	261	339	164	178	199	219	239	284	369
	67	75	82	90	99	107	126	163	89	96	107	117	127	149	192
48	128	144	157	175	194	211	250	325	157	171	190	210	229	272	353
	63	70	77	85	93	101	118	153	83	90	100	110	119	140	180
49									150	164	183	202	220	261	339
									78	85	94	103	112	131	169
50									144	157	175	194	211	250	325
									73	80	89	97	105	124	159
51									139	151	168	186	203	241	313
									69	75	83	91	99	116	150
52									133	145	162	179	195	231	301
									65	71	79	86	93	110	142

ASD

STANDARD LOAD TABLE FOR OPEN WEB STEEL JOISTS, K-SERIES
Based on a 50 ksi Maximum Yield Strength - Loads Shown In Pounds Per Linear Foot (plf)

Joist Designation	28K6	28K7	28K8	28K9	28K10	28K12	30K7	30K8	30K9	30K10	30K11	30K12
Depth (In.)	28	28	28	28	28	28	30	30	30	30	30	30
Approx. Wt. (lbs./ft.)	8.9	9.2	9.8	10.5	11.8	14.5	9.6	10.0	10.6	11.9	13.3	15.0
Span (ft.) ↓												
27	550 550	550 550	550 550	550 550	550 550	550 550						
28	548 541	550 543	550 543	550 543	550 543	550 543						
29	511 486	550 522	550 522	550 522	550 522	550 522	550 550	550 550	550 550	550 550	550 550	550 550
30	477 439	531 486	550 500	550 500	550 500	550 500	550 543	550 543	550 543	550 543	550 543	550 543
31	446 397	497 440	550 480	550 480	550 480	550 480	534 508	550 520	550 520	550 520	550 520	550 520
32	418 361	466 400	515 438	549 463	549 463	549 463	501 461	549 500	549 500	549 500	549 500	549 500
33	393 329	438 364	484 399	527 432	532 435	532 435	471 420	520 460	532 468	532 468	532 468	532 468
34	370 300	412 333	456 364	496 395	516 410	516 410	443 384	490 420	516 441	516 441	516 441	516 441
35	349 275	389 305	430 333	468 361	501 389	501 389	418 351	462 384	501 415	501 415	501 415	501 415
36	330 252	367 280	406 306	442 332	487 366	487 366	395 323	436 353	475 383	487 392	487 392	487 392
37	312 232	348 257	384 282	418 305	474 344	474 344	373 297	413 325	449 352	474 374	474 374	474 374
38	296 214	329 237	364 260	396 282	461 325	461 325	354 274	391 300	426 325	461 353	461 353	461 353
39	280 198	313 219	346 240	376 260	447 306	449 308	336 253	371 277	404 300	449 333	449 333	449 333
40	266 183	297 203	328 222	357 241	424 284	438 291	319 234	353 256	384 278	438 315	438 315	438 315
41	253 170	283 189	312 206	340 224	404 263	427 277	303 217	335 238	365 258	427 300	427 300	427 300
42	241 158	269 175	297 192	324 208	384 245	417 264	289 202	320 221	348 240	413 282	417 284	417 284
43	230 147	257 163	284 179	309 194	367 228	407 252	276 188	305 206	332 223	394 263	407 270	407 270
44	220 137	245 152	271 167	295 181	350 212	398 240	263 176	291 192	317 208	376 245	398 258	398 258
45	210 128	234 142	259 156	282 169	334 198	389 229	251 164	278 179	303 195	359 229	389 246	389 246
46	201 120	224 133	248 146	270 158	320 186	380 219	241 153	266 168	290 182	344 214	380 236	380 236
47	192 112	214 125	237 136	258 148	306 174	372 210	230 144	255 157	277 171	329 201	372 226	372 226
48	184 105	206 117	227 128	247 139	294 163	365 201	221 135	244 148	266 160	315 188	362 215	365 216
49	177 99	197 110	218 120	237 130	282 153	357 193	212 127	234 139	255 150	303 177	347 202	357 207
50	170 93	189 103	209 113	228 123	270 144	350 185	203 119	225 130	245 141	291 166	333 190	350 199
51	163 88	182 97	201 106	219 115	260 136	338 175	195 112	216 123	235 133	279 157	320 179	343 192
52	157 83	175 92	193 100	210 109	250 128	325 165	188 106	208 116	226 126	268 148	308 169	336 184
53	151 78	168 87	186 95	203 103	240 121	313 156	181 100	200 109	218 119	258 140	296 159	330 177
54	145 74	162 82	179 89	195 97	232 114	301 147	174 94	192 103	209 112	249 132	285 150	324 170
55	140 70	156 77	173 85	188 92	223 108	290 139	168 89	185 98	202 106	240 125	275 142	312 161
56	135 66	151 73	166 80	181 87	215 102	280 132	162 84	179 92	195 100	231 118	265 135	301 153
57							156 80	173 88	188 95	223 112	256 128	290 145
58							151 76	167 83	181 90	215 106	247 121	280 137
59							146 72	161 79	175 86	208 101	239 115	271 130
60							141 69	156 75	169 81	201 96	231 109	262 124

STANDARD LRFD LOAD TABLE

FOR KCS JOISTS

Based on a 50 ksi Maximum Yield Strength
Adopted by the Steel Joist Institute May 1, 2000
Revised to May 18, 2010 – Effective December 31, 2010

The figures in the following table give the Moment Capacity (kip-in.) and Shear Capacity (lbs). The maximum uniformly distributed load capacity in **LRFD** shall not exceed 825 plf and a single concentrated load cannot exceed the shear capacity. Sloped parallel-chord **KCS** Joists shall use the appropriate moment and shear capacity for the span as defined by the length along the slope.

The approximate **KCS** Joist weights per linear foot shown in this table do not include accessories.

The **KCS** Joist designation is not used to establish bridging requirements. The Bridging Table Section Numbers given in the **KCS** Standard Load Table indicate the equivalent **K**-Series joist of the same depth to be used for determination of the number of bridging rows, the size of horizontal bridging, and the need for erection stability bridging. While the need for erection stability bridging (diagonal bridging with bolted connections at the chords and intersections), can be determined from the **RED** shaded portion of the Standard Load Table, Open Web Steel Joists, **K**-Series, for convenience the **KCS** Load Table also includes a column for erection stability bridging. Where the span of the **KCS** Joist designation exceeds the length in ft. listed, the row of bridging nearest the joist midspan shall be erection stability bridging. Where "NA" is listed in the column, the **KCS** Joist designation does not require bolted diagonal erection bridging regardless of span.

For the proper handling of concentrated and/or varying loads, see Section 2.3 in the Code of Standard Practice for Steel Joists and Joist Girders.

LRFD

STANDARD LOAD TABLE FOR KCS OPEN WEB STEEL JOISTS

Based on a 50 ksi Maximum Yield Strength

JOIST DESIGNATION	DEPTH (in.)	MOMENT CAPACITY (k-in.)	SHEAR CAPACITY* (lbs)	APPROX. WEIGHT** (lbs/ft.)	GROSS MOMENT OF INERTIA ($in.^4$)	ERECTION STABILITY BRIDGING REQ'D (ft.)	BRIDGING TABLE SECTION NUMBER
10KCS1	10	258	3000	6.0	29	NA	1
10KCS2	10	337	3750	7.5	37	NA	1
10KCS3	10	444	4500	10.0	47	NA	1
12KCS1	12	313	3600	6.0	43	NA	3
12KCS2	12	411	4500	8.0	55	NA	5
12KCS3	12	543	5250	10.0	71	NA	5
14KCS1	14	370	4350	6.5	59	NA	4
14KCS2	14	486	5100	8.0	77	NA	6
14KCS3	14	642	5850	10.0	99	NA	6
16KCS2	16	523	6000	8.5	99	NA	6
16KCS3	16	705	7200	10.5	128	NA	9
16KCS4	16	1080	7950	14.5	192	NA	9
16KCS5	16	1401	8700	18.0	245	NA	9
18KCS2	18	592	7050	9.0	127	35-0	6
18KCS3	18	798	7800	11.0	164	NA	9
18KCS4	18	1225	8550	15.0	247	NA	10
18KCS5	18	1593	9300	18.5	316	NA	10
20KCS2	20	663	7800	9.5	159	36-0	6
20KCS3	20	892	9000	11.5	205	39-0	9
20KCS4	20	1371	11850	16.5	308	NA	10
20KCS5	20	1786	12600	20.0	396	NA	10
22KCS2	22	732	8850	10.0	194	36-0	6
22KCS3	22	987	9900	12.5	251	40-0	9
22KCS4	22	1518	11850	16.5	377	NA	11
22KCS5	22	1978	12900	20.5	485	NA	11
24KCS2	24	801	9450	10.0	232	39-0	6
24KCS3	24	1080	10800	12.5	301	44-0	9
24KCS4	24	1662	12600	16.5	453	NA	12
24KCS5	24	2172	13350	20.5	584	NA	12
26KCS2	26	870	9900	10.0	274	39-0	6
26KCS3	26	1174	11700	12.5	355	44-0	9
26KCS4	26	1809	12750	16.5	536	NA	12
26KCS5	26	2364	13800	20.5	691	NA	12
28KCS2	28	939	10350	10.5	320	40-0	6
28KCS3	28	1269	12000	12.5	414	45-0	9
28KCS4	28	1954	12750	16.5	626	53-0	12
28KCS5	28	2556	13800	20.5	808	53-0	12
30KCS3	30	1362	12000	13.0	478	45-0	9
30KCS4	30	2100	12750	16.5	722	54-0	12
30KCS5	30	2749	13800	21.0	934	54-0	12

*Maximum uniformly distributed load capacity is 825 plf and single concentrated load cannot exceed shear capacity

**Does not include accessories

STANDARD ASD LOAD TABLE

FOR KCS JOISTS

Based on a 50 ksi Maximum Yield Strength
Adopted by the Steel Joist Institute May 2, 1994
Revised to May 18, 2010 – Effective December 31, 2010

The figures in the following table give the Moment Capacity (kip-in.) and Shear Capacity (lbs). The maximum uniformly distributed load capacity in **ASD** shall not exceed 550 plf and a single concentrated load cannot exceed the shear capacity. Sloped parallel-chord **KCS** Joists shall use the appropriate moment and shear capacity for the span as defined by the length along the slope.

The approximate **KCS** Joist weights per linear foot shown in the table do not include accessories.

The **KCS** Joist designation is not used to establish bridging requirements. The Bridging Table Section Numbers given in the **KCS** Standard Load Table indicate the equivalent **K**-Series joist of the same depth to be used for determination of the number of bridging rows, the size of horizontal bridging, and the need for erection stability bridging. While the need for erection stability bridging (diagonal bridging with bolted connections at the chords and intersections), can be determined from the **RED** shaded portion of the Standard Load Table, Open Web Steel Joists, **K**-Series, for convenience the **KCS** Load Table also includes a column for erection stability bridging. Where the span of the **KCS** Joist designation exceeds the length in ft. listed, the row of bridging nearest the joist midspan shall be erection stability bridging. Where "NA" is listed in the column, the **KCS** Joist designation does not require bolted diagonal erection bridging regardless of span.

For the proper handling of concentrated and/or varying loads, see Section 2.3 in the Code of Standard Practice for Steel Joists and Joist Girders.

STANDARD LOAD TABLE FOR KCS OPEN WEB STEEL JOISTS

Based on a 50 ksi Maximum Yield Strength

JOIST DESIGNATION	DEPTH (in.)	MOMENT CAPACITY (k-in.)	SHEAR CAPACITY* (lbs)	APPROX. WEIGHT** (lbs/ft.)	GROSS MOMENT OF INERTIA ($in.^4$)	ERECTION STABILITY BRIDGING REQ'D (ft.)	BRIDGING TABLE SECTION NUMBER
10KCS1	10	172	2000	6.0	29	NA	1
10KCS2	10	225	2500	7.5	37	NA	1
10KCS3	10	296	3000	10.0	47	NA	1
12KCS1	12	209	2400	6.0	43	NA	3
12KCS2	12	274	3000	8.0	55	NA	5
12KCS3	12	362	3500	10.0	71	NA	5
14KCS1	14	247	2900	6.5	59	NA	4
14KCS2	14	324	3400	8.0	77	NA	6
14KCS3	14	428	3900	10.0	99	NA	6
16KCS2	16	349	4000	8.5	99	NA	6
16KCS3	16	470	4800	10.5	128	NA	9
16KCS4	16	720	5300	14.5	192	NA	9
16KCS5	16	934	5800	18.0	245	NA	9
18KCS2	18	395	4700	9.0	127	35-0	6
18KCS3	18	532	5200	11.0	164	NA	9
18KCS4	18	817	5700	15.0	247	NA	10
18KCS5	18	1062	6200	18.5	316	NA	10
20KCS2	20	442	5200	9.5	159	36-0	6
20KCS3	20	595	6000	11.5	205	39-0	9
20KCS4	20	914	7900	16.5	308	NA	10
20KCS5	20	1191	8400	20.0	396	NA	10
22KCS2	22	488	5900	10.0	194	36-0	6
22KCS3	22	658	6600	12.5	251	40-0	9
22KCS4	22	1012	7900	16.5	377	NA	11
22KCS5	22	1319	8600	20.5	485	NA	11
24KCS2	24	534	6300	10.0	232	39-0	6
24KCS3	24	720	7200	12.5	301	44-0	9
24KCS4	24	1108	8400	16.5	453	NA	12
24KCS5	24	1448	8900	20.5	584	NA	12
26KCS2	26	580	6600	10.0	274	39-0	6
26KCS3	26	783	7800	12.5	355	44-0	9
26KCS4	26	1206	8500	16.5	536	NA	12
26KCS5	26	1576	9200	20.5	691	NA	12
28KCS2	28	626	6900	10.5	320	40-0	6
28KCS3	28	846	8000	12.5	414	45-0	9
28KCS4	28	1303	8500	16.5	626	53-0	12
28KCS5	28	1704	9200	20.5	808	53-0	12
30KCS3	30	908	8000	13.0	478	45-0	9
30KCS4	30	1400	8500	16.5	722	54-0	12
30KCS5	30	1833	9200	21.0	934	54-0	12

*Maximum uniformly distributed load capacity is 550 plf and single concentrated load cannot exceed shear capacity

**Does not include accessories

JOIST SUBSTITUTES K SERIES

Joist substitutes are 2.5 inch (64 mm) deep sections intended for use in very short spans (less than 8 feet (2.4 m) where Open Web Steel Joists are impractical. They are commonly specified to span over hallways and short spans in skewed bays.

Joist substitutes are fabricated from material conforming to Steel Joist Institute Specifications. Full lateral support to the compressive flange is provided by attachments to the deck. Caution must be exercised during erection since joist substitutes exhibit some degree of instability. After erection and before loads of any description are placed on the joist substitutes, the ends must be attached to the supports per SJI K- Series specifications and the deck installed and attached to the top flange.

Tables below list uniform loads based on LRFD and ASD methods of design and listed in U.S. Customary units:

LRFD

LOAD TABLES FOR 2.5 INCH SIMPLE SPAN JOIST SUBSTITUTES, K-SERIES Based on a Maximum Yield Strength of 50 ksi			
Designation	2.5K1	2.5K2	2.5K3
Span (ft-in)	Pounds per Linear foot		
4'-0"	825	825	825
5'-0"	825	825	825
6'-0"	579	804	825
7'-0"	418	580	810
8'-0"	316	439	612
9'-0"	0	343	480
10'-0"	0	0	385

ASD

LOAD TABLES FOR 2.5 INCH SIMPLE SPAN JOIST SUBSTITUTES, K-SERIES Based on a Maximum Yield Strength of 50 ksi			
Designation	2.5K1	2.5K2	2.5K3
Span (ft-in)	Pounds per Linear Foot		
4'-0"	550	550	550
5'-0"	550	550	550
6'-0"	386	536	550
7'-0"	279	387	540
8'-0"	211	293	408
9'-0"	0	229	320
10'-0"	0	0	257

FABRICATION

- Depth 2.5 in
- Maximum Length 10 ft
- Minimum Length 3 ft
- Contact your local Vulcraft plant for sloped or pitched seat information.

2.5K JOIST SUBSTITUTE PROPERTIES

2.5K TYPE	2.5K1	2.5K2	2.5K3
S in^3	0.62	0.86	1.20
I in^4	0.77	1.07	1.50
Approximate weight (lbs/ft)	3.0	4.2	6.4

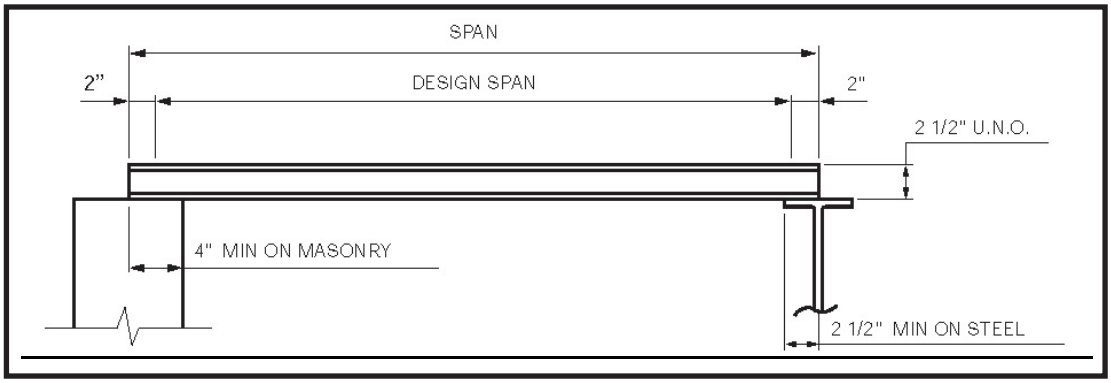

NOTE: 2.5K SERIES NOT U.L. APPROVED.

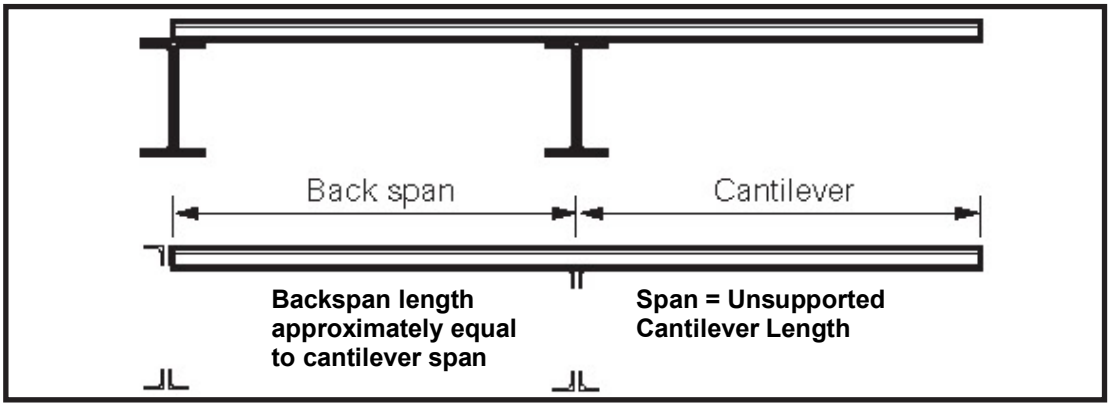

NOTE: 2.5K SERIES NOT U.L. APPROVED.

LRFD

LOAD TABLES FOR 2.5 INCH JOIST OUTRIGGERS, K-SERIES									
OUTRIGGER TYPE	TOTAL ALLOWABLE LOAD FOR UNSUPPORTED CANTILEVER PLF SPAN ft-in								
	2'-0"	2'-6"	3'-0"	3'-6"	4'-0"	4'-6"	5'-0"	5'-6"	6'-0"
2.5K1	825	744	516	379	291	229	186	153	129
2.5K2	825	825	717	526	403	318	258	213	179
2.5K3	825	825	825	735	562	444	360	297	250

ASD

LOAD TABLES FOR 2.5 INCH JOIST OUTRIGGERS, K-SERIES									
OUTRIGGER TYPE	TOTAL ALLOWABLE LOAD FOR UNSUPPORTED CANTILEVER PLF SPAN ft-in								
	2'-0"	2'-6"	3'-0"	3'-6"	4'-0"	4'-6"	5'-0"	5'-6"	6'-0"
2.5K1	550	496	344	253	194	153	124	102	86
2.5K2	550	550	478	351	269	212	172	142	119
2.5K3	550	550	550	490	375	296	240	198	167

*Serviceability requirements must be checked by the specifying professional.

STANDARD ASD LOAD TABLE
STANDARD LRFD LOAD TABLE
FOR TOP CHORD EXTENSIONS (S TYPE) and (R TYPE)

Based on a 50 ksi Maximum Yield Strength
ASD Load Table adopted by the Steel Joist Institute November 15, 1989
LRFD Load Table adopted by the Steel Joist Institute May 1, 2000
Revised to May 18, 2010 – Effective December 31, 2010

Joist extensions are commonly furnished to support a variety of overhang conditions. Two types are pictured below. The first is the TOP CHORD EXTENSION or "S" TYPE, which has only the top chord angles extended. The second is the EXTENDED END or "R" TYPE in which the standard 2½, (64 mm) end bearing depth is maintained over the entire length of the extension. The "S" TYPE extension is so designated because of its Simple nature whereas the "R" TYPE involves Reinforcing the top chord angles. The **specifying professional** should be aware that an "S" TYPE is more economical and should be specified whenever possible.

The following load tables are for K-Series TOP CHORD EXTENSIONS and EXTENDED ENDS for ASD and LRFD methods of design. The tabulated values are the maximum allowable uniform load in pounds per linear foot (kiloNewton/meter). The "S" and "I" numbers shown in the load tables are the Elastic Section Modulus and Moment of Inertia of the extension (Section) number with which they are associated.

In cases where it is not possible to meet specific job requirements with a 2½" (64 mm) deep "R" type extension (refer to "S" and "I" values in the Extended End Load Table), the depth of the extension must be increased to provide greater load-carrying capacity.

The "S" and "R" extension numbers are intended to be associated with Standard K-Series Joist Sizes of matching Section Number. When possible, the extension number should be limited to no more than the Standard K-Series Joist Section Number, for optimum economy.

When TOP CHORD EXTENSIONS or EXTENDED ENDS are specified the bracing requirements must be considered by the specifying professional.

It should be noted that an "R" TYPE extension must be specified when building details dictate a 2½, (64 mm) depth at the end of the extension. In the absence of specific instructions. the joist manufacturer may provide either type.

TOP CHORD EXTENSION **EXTENDED END**

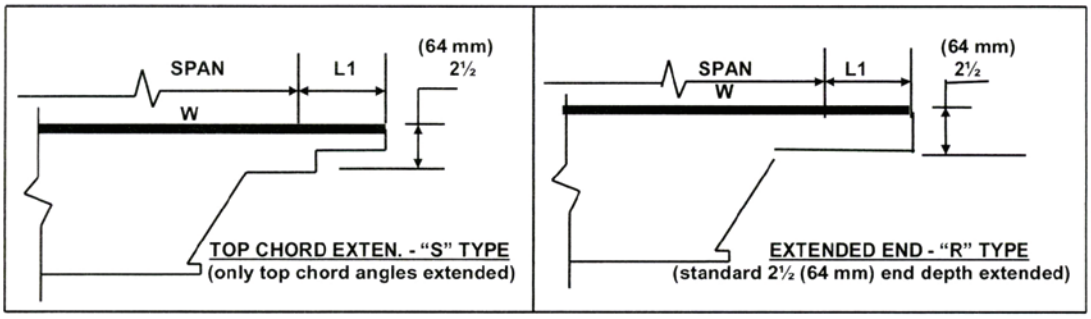

W = Uniform Load L1= Length of Extension SPAN = See **K**-Series Standard Specification for Definition of Span

ASD

TOP CHORD EXTENSION LOAD TABLE (R TYPE)
Based on a Yield Strength of 50 ksi
Pounds Per Linear Foot

TYPE	"S" ($in.^3$)	"I" ($in.^4$)	LENGTH (L1) 0'-6"	1'-0"	1'-6"	2'-0"	2'-6"	3'-0"	3'-6"	4'-0"	4'-6"	5'-0"	5'-6"	6'-0"
R1	0.895	1.119	550	550	550	550	550	446	332	257	205	167	139	117
R2	0.923	1.157	550	550	550	550	550	460	343	266	212	173	144	121
R3	1.039	1.299	550	550	550	550	550	518	386	299	239	195	162	137
R4	1.147	1.433	550	550	550	550	550	550	426	330	263	214	178	150
R5	1.249	1.561	550	550	550	550	550	550	464	359	286	233	194	164
R6	1.352	1.690	550	550	550	550	550	550	502	389	310	253	210	177
R7	1.422	1.802	550	550	550	550	550	550	528	409	326	266	221	186
R8	1.558	1.948	550	550	550	550	550	550	550	448	357	291	242	204
R9	1.673	2.091	550	550	550	550	550	550	550	481	384	313	260	219
R10	1.931	2.414	550	550	550	550	550	550	550	550	443	361	300	253
R11	2.183	2.729	550	550	550	550	550	550	550	550	501	408	339	287
R12	2.413	3.016	550	550	550	550	550	550	550	550	550	451	375	317

ASD

TOP CHORD EXTENSION LOAD TABLE (S TYPE)
Based on a Maximum Yield Strength of 50 ksi
Pounds Per Linear Foot

TYPE	"S" ($in.^3$)	"I" ($in.^4$)	LENGTH (L1) 0'-6"	1'-0"	1'-6"	2'-0"	2'-6"	3'-0"	3'-6"	4'-0"	4'-6"
S1	0.099	0.088	550	363	178	105					
S2	0.127	0.138	550	467	229	135					
S3	0.144	0.156	550	529	259	153					
S4	0.160	0.172	550	550	288	170	112				
S5	0.176	0.188	550	550	316	187	123				
S6	0.192	0.204	550	550	345	204	135				
S7	0.241	0.306	550	550	433	256	169	120			
S8	0.266	0.332	550	550	478	283	187	132			
S9	0.288	0.358	550	550	518	306	202	143	107		
S10	0.380	0.544	550	550	550	404	267	189	141	109	
S11	0.438	0.622	550	550	550	466	307	218	162	126	100
S12	0.494	0.696	550	550	550	526	347	246	183	142	113

LRFD

TOP CHORD EXTENSION LOAD TABLE (R TYPE)
Based on a Yield Strength of 50 ksi
Pounds Per Linear Foot

TYPE	"S" ($in.^3$)	"I" ($in.^4$)	LENGTH (L1) 0'-6"	1'-0"	1'-6"	2'-0"	2'-6"	3'-0"	3'-6"	4'-0"	4'-6"	5'-0"	5'-6"	6'-0"
R1	0.895	1.119	825	825	825	825	825	669	498	385	307	250	208	175
R2	0.923	1.157	825	825	825	825	825	690	514	399	318	259	216	181
R3	1.039	1.299	825	825	825	825	825	777	579	448	358	292	243	205
R4	1.147	1.433	825	825	825	825	825	825	639	495	394	321	267	225
R5	1.249	1.561	825	825	825	825	825	825	696	538	429	349	291	246
R6	1.352	1.690	825	825	825	825	825	825	753	583	465	379	315	265
R7	1.422	1.802	825	825	825	825	825	825	792	613	489	399	331	279
R8	1.558	1.948	825	825	825	825	825	825	825	672	535	436	363	306
R9	1.673	2.091	825	825	825	825	825	825	825	721	576	469	390	328
R10	1.931	2.414	825	825	825	825	825	825	825	825	664	541	450	379
R11	2.183	2.729	825	825	825	825	825	825	825	825	751	612	508	430
R12	2.413	3.016	825	825	825	825	825	825	825	825	825	676	562	475

LRFD

TOP CHORD EXTENSION LOAD TABLE (S TYPE)
Based on a Yield Strength of 50 ksi
Pounds Per Linear Foot

TYPE	"S" ($in.^3$)	"I" ($in.^4$)	LENGTH (L1) 0'-6"	1'-0"	1'-6"	2'-0"	2'-6"	3'-0"	3'-6"	4'-0"	4'-6"			
S1	0.099	0.088	825	544	267	157								
S2	0.127	0.138	825	700	343	202								
S3	0.144	0.156	825	793	388	229								
S4	0.160	0.172	825	825	432	255	168							
S5	0.176	0.188	825	825	474	280	184							
S6	0.192	0.204	825	825	517	306	202							
S7	0.241	0.306	825	825	649	384	253	180						
S8	0.266	0.332	825	825	717	424	280	198						
S9	0.288	0.358	825	825	777	459	303	214	160					
S10	0.380	0.544	825	825	825	606	400	283	211	163				
S11	0.438	0.622	825	825	825	699	460	327	243	189	150			
S12	0.494	0.696	825	825	825	789	520	369	274	213	169			

K SERIES OPEN WEB STEEL JOISTS

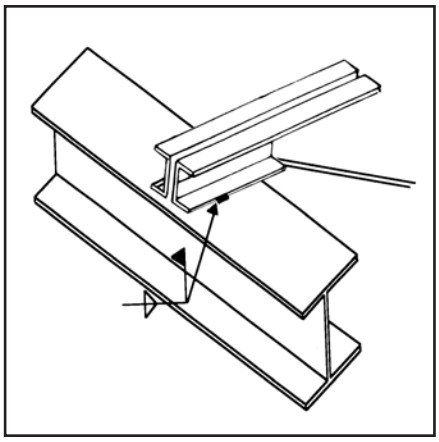

ANCHORAGE TO STEEL
SEE SJI SPECIFICATION 5.3 (b) AND 5.6

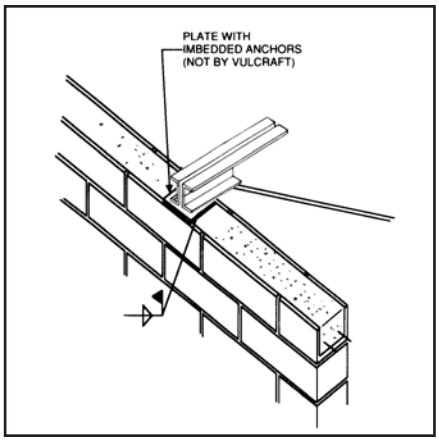

ANCHORAGE TO MASONARY
SEE SJI SPECIFICATION 5.3 (a) AND 5.6

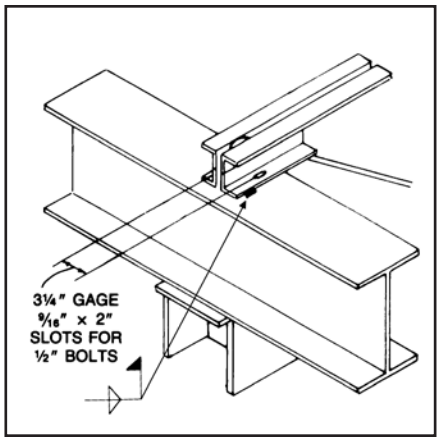

BOLTED CONNECTION*
TYPICALLY REQUIRED AT COLUMNS

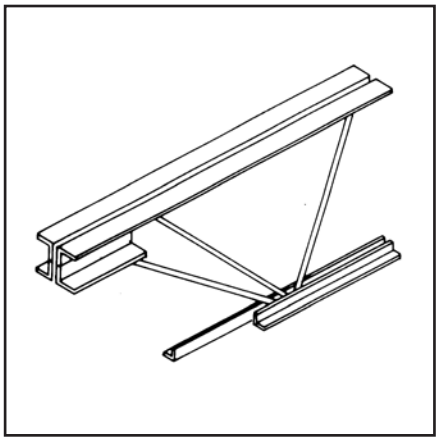

CEILING EXTENSION

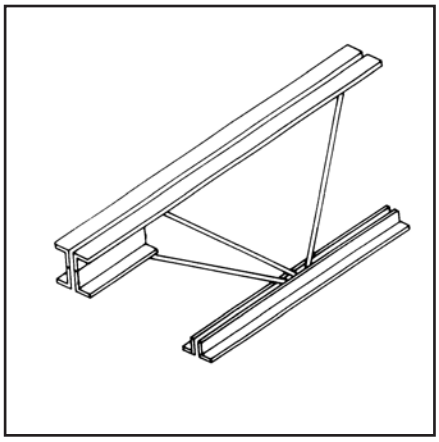

BOTTOM CHORD STRUT

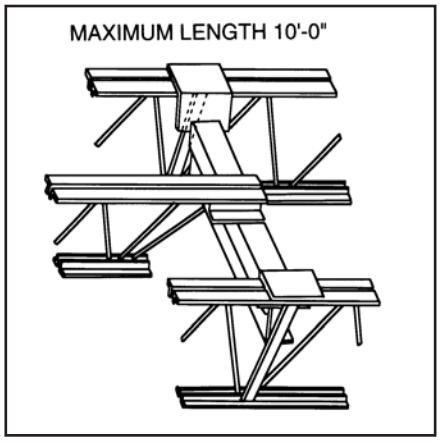

HEADERS
Note: If header does not bear at a Joist Panel Point add extra web in field as shown.
EW or Panel Point by Vulcraft

APPROXIMATE DUCT OPENING SIZES

JOIST DEPTH	ROUND	SQUARE	RECTANGLE
10 INCHES	5 INCHES	4 x 4 INCHES	3 x 7 INCHES
12 INCHES	7 INCHES	5 x 5 INCHES	3 X 8 INCHES
14 INCHES	8 INCHES	6 X 6 INCHES	5 X 9 INCHES
16 INCHES	8 INCHES	6 X 6 INCHES	5 X 9 INCHES
18 INCHES	9 INCHES	7 X 7 INCHES	5 X 9 INCHES
20 INCHES	10 INCHES	8 X 8 INCHES	6 X 11 INCHES
22 INCHES	10 INCHES	9 X 9 INCHES	7 X 11 INCHES
24 INCHES	12 INCHES	10 X 10 INCHES	7 X 13 INCHES
28 INCHES	15 INCHES*	12 X 12 INCHES*	9 X 18 INCHES*
28 INCHES	16 INCHES*	13 X 13 INCHES*	9 X 18 INCHES*
30 INCHES	17 INCHES*	14 X 14 INCHES*	10 X 18 INCHES*

SPECIFYING PROFESSIONAL MUST INDICATE ON STRUCTURAL DRAWINGS SIZE AND LOCATION OF ANY DUCT THAT IS TO PASS THRU JOIST. THIS DOES NOT INCLUDE ANY FIREPROOFING ATTACHED TO JOIST. FOR DEEPER LH- AND DLH- SERIES JOISTS, CONSULT MANUFACTURER.

***FOR ROD WEB CONFIGURATION, THESE WILL BE REDUCED. CONSULT MANUFACTURER.**

SEE SJI SPECIFICATION - SECTION 6.
FOR HANDLING AND ERECTION OF
K-SERIES OPEN WEB STEEL JOISTS AND
SJI TECHNICAL DIGEST NO. 9.

K SERIES OPEN WEB STEEL JOISTS

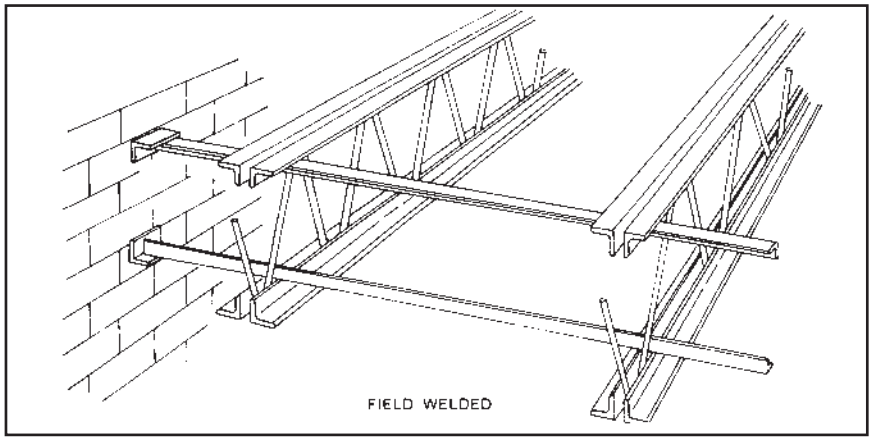

HORIZONTAL BRIDGING
SEE SJI SPECIFICATION 5.5 AND 6.

NOTE: DO NOT WELD BRIDGING TO JOIST WEB MEMBERS.
DO NOT HANG ANY MECHANICAL, ELECTRICAL, ETC. FROM BRIDGING.

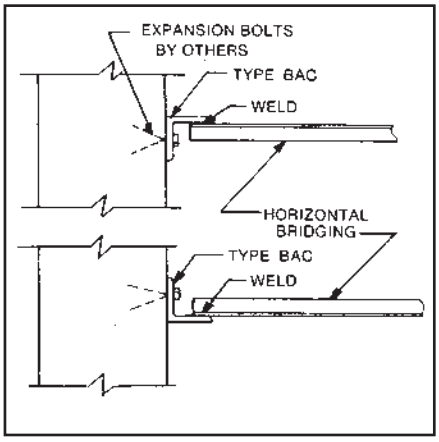

BRIDGING ANCHORS
SEE SJI SPECIFICATION 5.5 AND 6.

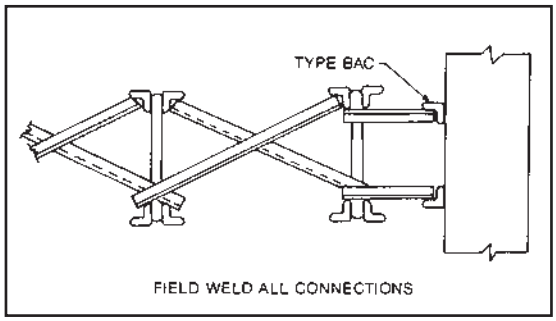

WELDED CROSS BRIDGING
SEE SJI SPECIFICATION 5.5 AND 6.
HORIZONTAL BRIDGING SHALL BE USED IN SPACE ADJACENT TO THE WALL TO ALLOW FOR PROPER DEFLECTION OF THE JOIST NEAREST THE WALL.

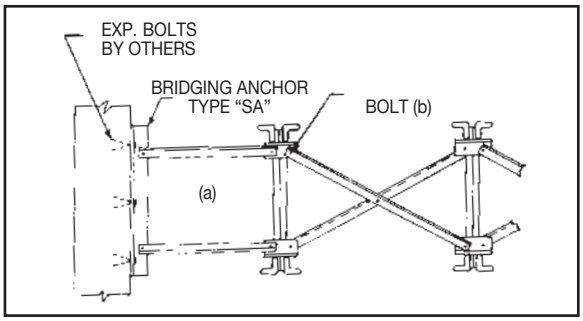

BOLTED CROSS BRIDGING
SEE SJI SPECIFICATION 5.5 AND 6.

(a) Horizontal Bridging units shall be used in the space adjacent to the wall to allow for proper deflection of the joist nearest the wall.

(b) For required bolt size refer to bridging table on page 184. NOTE: Clip configuration may vary from that shown.

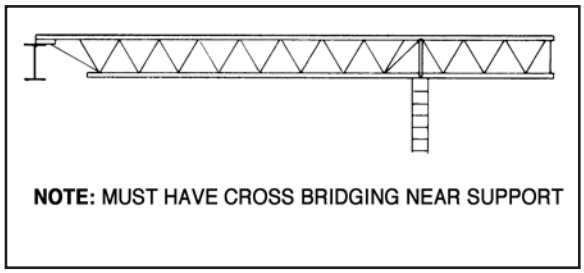

FULL DEPTH CANTILEVER END
SEE SJI SPECIFICATION 5.4 (d) AND 5.5 FOR BRIDGING REQUIREMENTS.

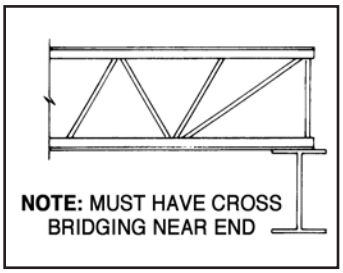

SQUARE END
SEE SJI SPECIFICATION 5.4 (d) AND 5.5 FOR BRIDGING REQUIREMENTS.

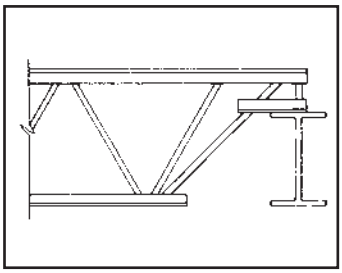

DEEP BEARINGS
CONFIGURATION MAY VARY

SLOPED SEAT REQUIREMENTS FOR SLOPES 3/8":12 AND GREATER
K-SERIES OPEN WEB STEEL JOISTS

LOW END W/OUT TOP CHORD EXTENSIONS

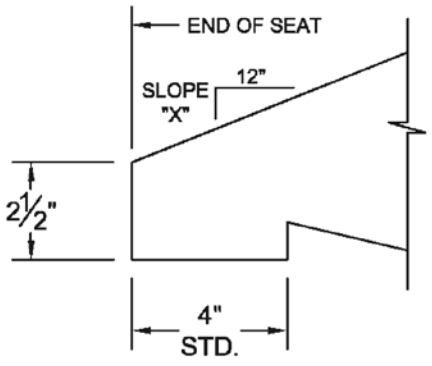

HIGH END W/OUT TOP CHORD EXTENSIONS

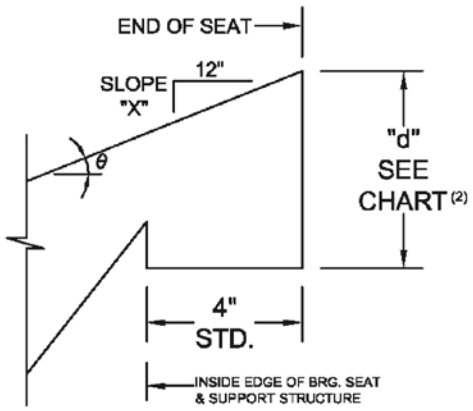

LOW END W/ TOP CHORD EXTENSIONS

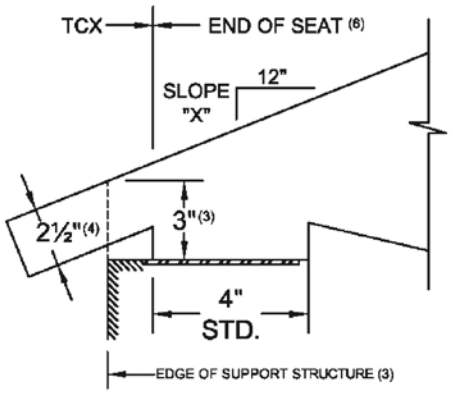

HIGH END W/ TOP CHORD EXTENSIONS

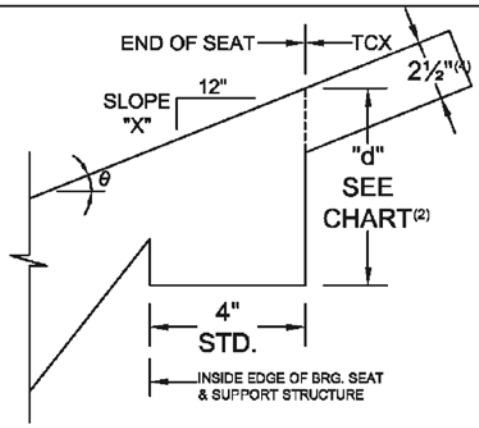

SLOPE "X":12	MINIMUM HIGH END SEAT DEPTH "d"
3/8	3 1/2
1/2	3 1/2
1	3 1/2
1 1/2	4
2	4
2 1/2	4
3	4 1/2
3 1/2	4 1/2
4	4 1/2
4 1/2	5
5	5
5 1/2	5 1/2
6	5 1/2
SEE NOTE (2) FOR SLOPE RATES GREATER THAN 6:12	

Notes:

(1) Depths shown are the minimum required for manufacturing of sloped seats. Depths may vary depending on actual bearing conditions.

(2) $d = 1/2 + 2.5/\cos\theta + 4\tan\theta$ (Rounded up to the nearest 1/2".)

(3) Clearance must be checked at outer edge of support. Increase bearing depths as required to allow passage of 2 1/2" deep extension.

(4) If extension depth greater than 2 1/2" is required, increase bearing depths accordingly. Extension lengths greater than 3'-0" and/or high loads may require increased bearing seat depths. Please contact joist supplier for additional guidance.

(5) If slope is 1/4 : 12 or less, sloped seats are not required.

(6) Required bearing seat depth is determined at END OF SEAT.

(7) Also refer to SJI Specification 5.3(a) for special considerations of joist end reaction location.

BRIDGING REQUIREMENTS FOR K-SERIES JOISTS

Number of Rows of Bridging***
Distances are Span Lengths

Section Numbers*	ERECTION STABILITY SPANS (SJI Spec. Section 6)		1 Row	2 Rows	3 Rows	4 Rows
	Depth	Span Less Than **				
#1	10 12 14	21' 23' 27'	Up Thru 17'	Over 17' thru 26'	Over 26' thru 28'	
#2	16	29'	Up thru 21'	Over 21' thru 30'	Over 30' thru 32'	
#3	12 14 16 18 20	25' 29' 30' 31' 32'	Up thru 18'	Over 18' thru 26'	Over 26' thru 40'	
#4	14 16 18 20 22 24	29' 32' 32' 34' 34' 36'	Up thru 20'	Over 20' thru 30'	Over 30' thru 41'	Over 41' thru 48'
#5	12 16 18 20 22 24	25' 32' 33' 34' 35' 38'	Up thru 20'	Over 20' thru 30'	Over 30' thru 42'	Over 42' thru 48'
	26	38'	Up thru 28'	Over 28' thru 41'	Over 41' thru 52'	
#6	14 16 18 20 22 24	29' 33' 35' 36' 36' 39'	Up thru 20'	Over 20' thru 31'	Over 31' thru 42'	Over 42' thru 48'
	26 28	39' 40'	Up thru 28'	Over 28' thru 41'	Over 41' thru 54'	Over 54' thru 56'
#7	16 18 20 22 24	33' 37' 39' 40' 43'	Up thru 23'	Over 23' thru 34'	Over 34' thru 48'	
	26 28 30	43' 43' 44'	Up thru 29'	Over 29' thru 44'	Over 44' thru 60'	
#8	24	43'	Up thru 25'	Over 25' thru 39'	Over 39' thru 48'	
	26 28 30	44' 44' 45'	Up thru 29'	Over 29' thru 44'	Over 44' thru 60'	
#9	16 18 20 22 24	33' 37' 39' 40' 44'	Up thru 22'	Over 22' thru 34'	Over 34' thru 48'	
	26 28 30	44' 45' 45'	Up thru 29'	Over 29' thru 44'	Over 44' thru 60'	
#10	18 20 22 24	37' 41' 45' 49'	Up thru 22'	Over 22' thru 38'	Over 38' thru 48'	
	26 28 30	49' 49' 50'	Up thru 29'	Over 29' thru 48'	Over 48' thru 60'	
#11	22	45'	Up thru 24'	Over 24' thru 39'	Over 39' thru 44'	
	30	52'	Up thru 34'	Over 34' thru 49'	Over 49' thru 60'	
#12	24	49'	Up thru 25'	Over 25' thru 43'	Over 43' thru 48'	
	26 28 30	53' 53' 54'	Up thru 29'	Over 29' thru 47'	Over 47' thru 60'	

* Last Digit (s) of joist designation.

** For spans EQUAL TO OR EXCEEDING that shown above, one of the required rows, nearest mid-span, must be diagonal type. Bolted diagonal bridgin shall be installed and connected BEFORE releasing the hoisting lines. Refer Specification Section 6 for handling and erection requirements.

*** See SJI Specifications 5.11 for uplift requirements

TABLE 2.7-1a

K-SERIES JOISTS
MAXIMUM JOIST SPACING FOR HORIZONTAL BRIDGING

JOIST SECTION NUMBER*	Bridging Force P_{br}	BRIDGING MATERIAL SIZE – Equal Leg Angles					
		1 x 7/64 r = 0.20"	1-1/4 x 7/64 r = 0.25"	1-1/2 x 7/64 r = 0.30"	1-3/4 x 7/64 r = 0.35"	2 x 1/8 r = 0.40"	2-1/2 x 5/32 r = 0.50"
	lbs.	ft.-in.	ft.-in.	ft.-in.	ft.-in.	ft.-in.	ft.-in.
1 to 8, incl.	340	5'- 0"	6'- 3"	7'- 6"	8'- 7"	10'- 0"	12'- 6"
9 to 10, incl.	450	4'- 4"	6'- 1"	7'- 6"	8'- 7"	10'- 0"	12'- 6"
11 to 12, incl.	560	3'- 11"	5'- 6"	7'- 3"	8'- 7"	10'- 0"	12'- 6"

*Refer to last digit(s) of Joist Designation
**Connection to joist shall resist a nominal unfactored 700 pound force (3114 N)

TABLE 2.7-2

K, LH, and DLH SERIES JOISTS
MAXIMUM JOIST SPACING FOR DIAGONAL BRIDGING

JOIST DEPTH	BRIDGING ANGLE SIZE – (EQUAL LEG ANGLE)							
	1 x 7/64 r = 0.20"	1-1/4 x 7/64 r = 0.25"	1-1/2 x 7/64 r = 0.30"	1-3/4 x 7/64 r = 0.35"	2 x 1/8 r = 0.40"	2 ½ x 5/32 r = 0.50"	3 x 3/16 r = 0.60"	3 ½ x 1/4 r = 0.70"
in.	**ft.- in.**	**ft.- in.**	**ft.- in.**	**ft.- in.**	**ft.- in.**	**ft.- in.**	**ft.- in.**	**ft.- in.**
12"	6'-7"	8'-3"	9'-11"	11'-7"	13'-3"	16'-7"	19'-11"	23'-3"
14"	6'-6"	8'-3"	9'-11"	11'-7"	13'-3"	16'-7"	19'-11"	23'-3"
16"	6'-6"	8'-2"	9'-10"	11'-7"	13'-3"	16'-7"	19'-11"	23'-3"
18"	6'-6"	8'-2"	9'-10"	11'-6"	13'-3"	16'-7"	19'-11"	23'-3"
20"	6'-5"	8'-2"	9'-10"	11'-6"	13'-2"	16'-7"	19'-11"	23'-3"
22"	6'-4"	8'-1"	9'-10"	11'-6"	13'-2"	16'-6"	19'-11"	23'-3"
24"	6'-4"	8'-1"	9'-9"	11'-5"	13'-2"	16'-6"	19'-10"	23'-3"
26"	6'-3"	8'-0"	9'-9"	11'-5"	13'-1"	16'-6"	19'-10"	23'-2"
28"	6'-3"	8'-0"	9'-8"	11'-5"	13'-1"	16'-6"	19'-10"	23'-2"
30"	6'-2"	7'-11	9'-8"	11'-4"	13'-1"	16'-5"	19'-10"	23'-2"
32"	6'-1"	7'-10"	9'-7"	11'-4"	13'-0"	16'-5"	19'-9"	23'-2"
36"	5'-11"	7'-9"	9'-6"	11'-3"	12'-11"	16'-4"	19'-9"	23'-1"
40"	5'-9"	7'-7"	9'-5"	11'-2"	12'-10"	16'-4"	19'-8"	23'-1"
44"	5'-6"	7'-5"	9'-3"	11'-0"	12'-9"	16'-3"	19'-7"	23'-0"
48"	5'-4"	7'-3"	9'-2"	10'-11"	12'-8"	16'-2"	19'-7"	22'-11"
52"	5'-0"	7'-1"	9'-0"	10'-10"	12'-7"	16'-1"	19'-6"	22'-11"
56"	4'-9"	6'-10"	8'-10"	10'-8"	12'-5"	16'-0"	19'-5"	22'-10"
60"	4'-4"	6'-8"	8'-7"	10'-6"	12'-4"	15'-10"	19'-4"	22'-9"
64"	**	6'-4"	8 -5"	10'-4"	12'-2"	15'-9"	19'-3"	22'-8"
68"	**	6'-1"	8'-2"	10'-2"	12'-0"	15'-8"	19'-2"	22'-7"
72"	**	5'-9"	8'-0"	10'-0"	11'-10"	15'-6"	19'-1"	22'-6"
80"	**	5'-0"	7'-5"	9'-6"	11'-6"	15'-3"	18'-10"	22'-4"
88"		**	6'-9"	9'-0"	11'-1"	14'-11"	18'-7"	22'-1"
96"		**	6'-0"	8'-5"	10'-8"	14'-7"	18'-4"	21'-11"
104"			**	7'-9"	10'-1"	14'-2"	18'-0"	21'-8"
112"			**	7'-0"	9'-6"	13'-9"	17'-8"	21'-4"
120"				**	8'-9"	13'-4"	17'-3"	21'-1"

**INTERPOLATION BELOW THE MINIMUM VALUES SHOWN IS NOT ALLOWED.
SEE TABLE 2.7-3 FOR MINIMUM JOIST SPACE FOR DIAGONAL ONLY BRIDGING.

TABLE 2.7-1b

LH-SERIES JOISTS
MAXIMUM JOIST SPACING FOR HORIZONTAL BRIDGING

SPANS OVER 60 ft. REQUIRE BOLTED DIAGONAL BRIDGING

Joist Section Number*	Force P_{br} lbs.	BRIDGING MATERIAL SIZE Equal Leg Angles **1 x 7/64 r = 0.20"**	**1-1/4 x 7/64 r = 0.25"**	**1-1/2 x 7/64 r = 0.30"**	**1-3/4 x 7/64 r = 0.35"**	**2 x 1/8 r = 0.40"**	**2-1/2 x 5/32 r = 0.50"**
		ft.-in.	ft.-in.	ft.-in.	ft.-in.	ft.-in.	ft.-in.
02 to 03, incl.	400	4'–7"	6'–3"	7'–6"	8'–9"	10'–0"	12'–6"
04 to 05, incl.	550	3'–11"	5'–6"	7'–4"	8'–9"	10'–0"	12'–6"
06 to 08, incl.	750		4'–9"	6'–3"	7'–11"	10'–0"	12'–6"
09	850		4'–5"	5'–10"	7'–5"	9'–9"	12'–6"
10	900		4'–4"	5'–8"	7'–3"	9'–5"	12'–6"
11	950		4'–2"	5'–7"	7'–0"	9'–2"	12'–6"
12	1100		3'-11"	5'–2"	6'–8"	8'–6"	12'–6"
13	1200		3'-9"	4'–11"	6'–3"	8'-2"	12'–6"
14	1300			4'-9"	6'-0"	7'-10"	12'-4"
15	1450			4'-6"	5'-8"	7'-5"	11'-8"
16 to 17, incl.	1850			4'-0"	5'-0"	6'-7"	10'-4"
18 to 20, incl.	2000			3'-10"	4'-10"	6'-4"	9'-11"
21 to 22, incl.	2500				4'-4"	5'-8"	8'-10"
23 to 24, incl.	3100				3'-10"	5'-1"	7'-11"
25	3500					4'-9"	7'-6"

* Refer to last two digit(s) of Joist Designation

Bridging Requirements for LH-Series Joists
Erection Stability Spans (SJI Spec. Section 105)

Depth	Section Number*	Spans less than **	Depth	Section Number*	Spans less than **
18	02	33'	32	06 thru 07	47'
	03 thru 09	37'		08	55'
20	02	33'		09 thru 15	60'
	03	38'	36	07 thru 08	47'
	04 thru 10	41'		09	57'
24	03	35'		10 thru 15	60'
	04	39'	40	08 thru 09	47'
	05	40'		10 thru 17	60'
	06	45'	44	09	52'
	07 thru 11	49'		10 thru 17	60'
28	05	42'	48	10 thru 17	60'
	06	46'			
	07 thru 08	54'			
	09 thru 13	57'			

* Last two digits of joist designation.

** NOTE: For spans EQUAL TO OR EXCEEDING that shown, one of the rows nearest mid-span must be bolted diagonal type. For spans through 60 feet, the bolted diagonal bridging must be installed BEFORE releasing the hoisting lines. FOR SPANS OVER 60 FEET, ALL BRIDGING ROWS MUST BE BOLTED DIAGONAL TYPE. Spans over 60 feet through 100 feet require two rows of bolted diagonal bridging to be installed, at one-third points, BEFORE releasing the hoisting lines. Spans over 100 feet require ALL rows of bolted diagonal bridging to be installed BEFORE releasing the hoisting lines.

STANDARD TYPES

Longspan steel joists can be furnished with either underslung or square ends, with parallel chords or with single or double pitched top chords to provide sufficient slope for roof drainage.

The Longspan joist designation is determined by its nominal depth at the center of the span, except for offset double pitched joists, where the depth should be given at the ridge. A part of the designation should be either the section number or the total design load over the design live load (TL/LL given in plf).

All pitched joists will be cambered in addition to the pitch unless specified otherwise.

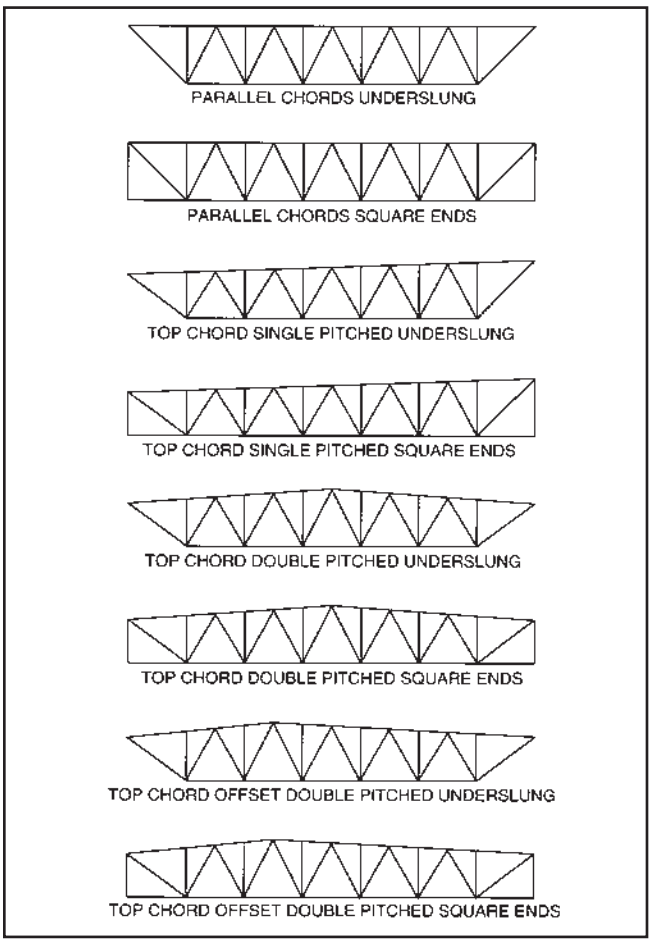

CAMBER

Non-Standard Types: The design professional shall provide on the structural drawings the amount of camber desired in inches. If camber is not specified, Vulcraft will use the camber values for LH and DLH joists based on top chord length or possibly no camber for certain scissor, arched, bowstring, or gable profiles.

Standard Types: The camber listed in the table will be fabricated into the joists unless the design professional specifically states otherwise on the structural drawings.

NON-STANDARD TYPES

The following joists can also be supplied by Vulcraft, however, **THE DISTRICT SALES OFFICE OR MANUFACTURING FACILITY NEAREST YOU SHOULD BE CONTACTED FOR ANY LIMITATIONS IN DEPTH OR LENGTH.**

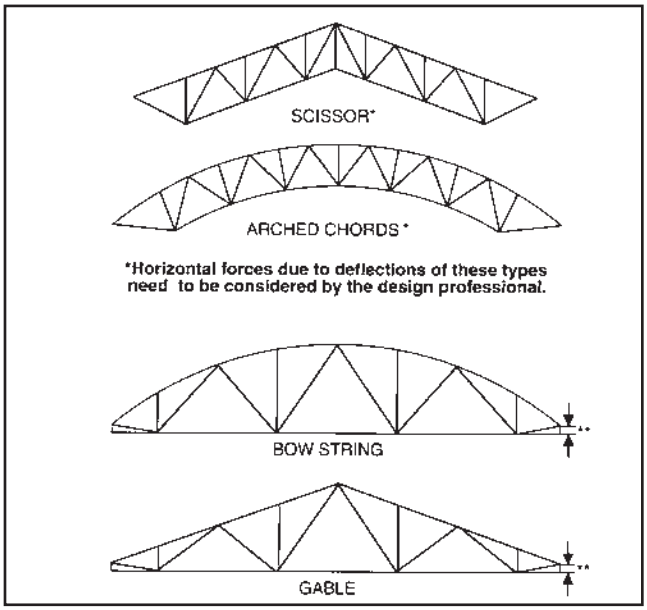

**Contact Vulcraft for minimum depth at ends.

CAMBER FOR STANDARD TYPES

LH &DLH series joists shall have camber in accordance with the following table:***

Top Chord Length	Approximate Camber
20'-0"	1/4"
30'-0"	3/8"
40'-0"	5/8"
50'-0"	1"
60'-0"	1 1/2"
70'-0"	2"
80'-0"	2 3/4"
90'-0"	3 1/2"
100'-0"	4 1/4"

** NOTE: If full camber is not desired near walls or other structural members please note on the structural drawings. For joist lengths exceeding 100'-0" a camber equal to Span/300 shall be used. The specifying professional shall give consideration to coordinating joist camber with adjacent framing.

LH & DLH SERIES LONGSPAN STEEL JOISTS

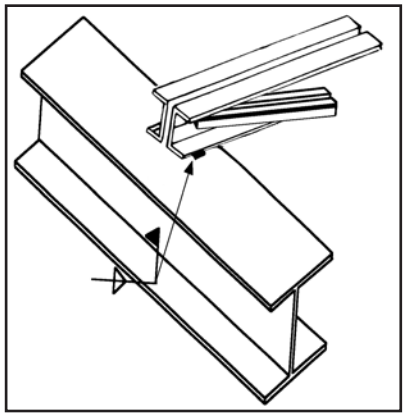

ANCHORAGE TO STEEL
SEE SJI SPECIFICATION
104.4 (b) AND 104.7 (b)

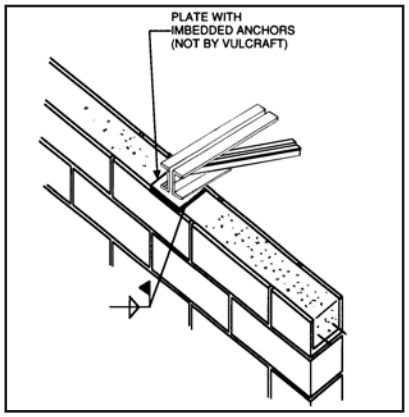

ANCHORAGE TO MASONRY
SEE SJI SPECIFICATION
104.4 (a) AND 104.7 (a)

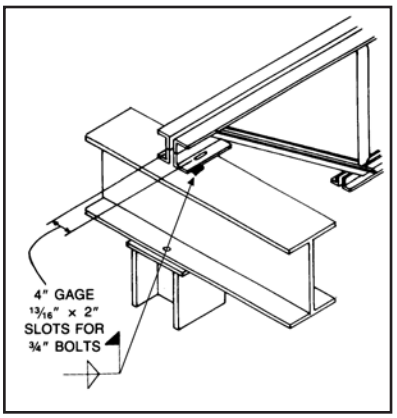

BOLTED CONNECTION
See Note (c)
Typically required at columns

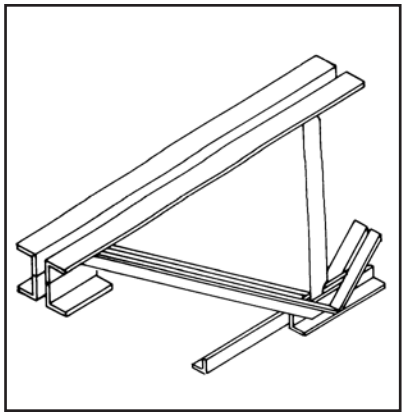

CEILING EXTENSION

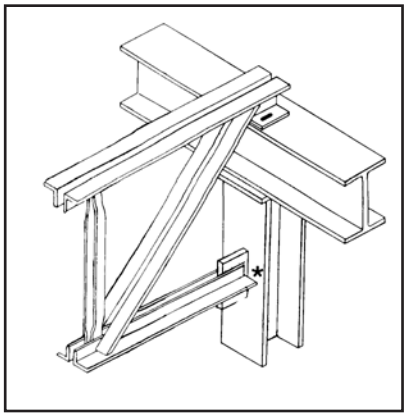

BOTTOM CHORD EXTENSION
*If bottom chord extension is to be bolted or welded the specifiying professional must provide axial loads on structural drawings.

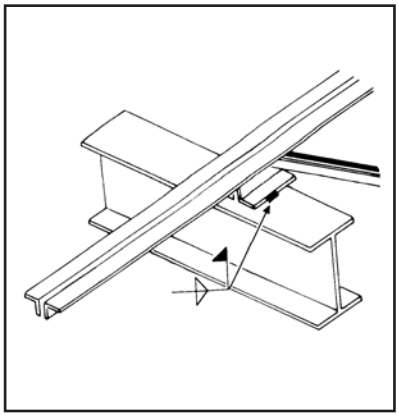

TOP CHORD EXTENSION
See Note (a)

(a) Extended top chords or full depth cantilever ends require the special attention of the specifying professional.
The magnitude and location of the design loads to be supported, the deflection requirements, and the proper bracing shall be clearly indicated on the structural drawings.

(b) See SJI Specification - Section 105 for Handling and Erection of LH and DLH joists.

(c) The Occupational Safety and Health Administration Standards (OSHA), Paragraph 1910.12 refers to Paragraph 1518.751 of “Construction Standards” which states:
“In steel framing, where bar joists are utilized, and columns are not framed in at least two directions with structural steel members, a bar joist shall be field-bolted at columns to provide lateral stability during construction.”

NOTE: Configurations may vary from that shown.

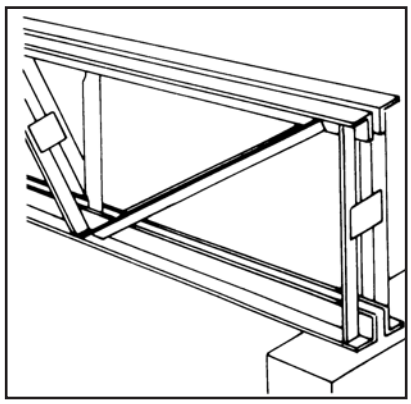

SQUARE END
See SJI Specification 104.5 (f).
Cross bridging required near the end of bottom bearing joist.

SLOPED SEAT REQUIRMENTS FOR SLOPES 3/8":12 AND GREATER
LH- AND DLH-SERIES OPEN WEB STEEL JOISTS

LOW END W/OUT TOP CHORD EXTENSIONS

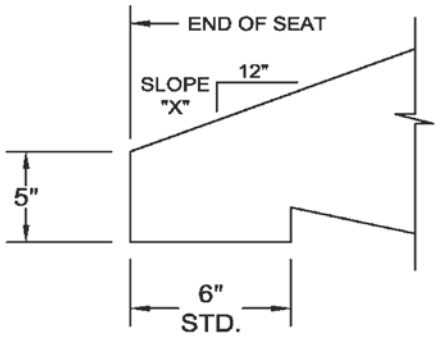

HIGH END W/OUT TOP CHORD EXTENSIONS

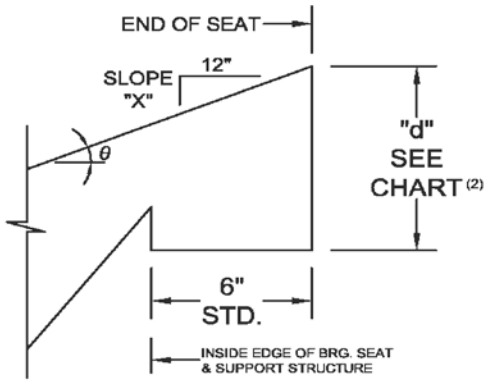

LOW END W/ TOP CHORD EXTENSIONS

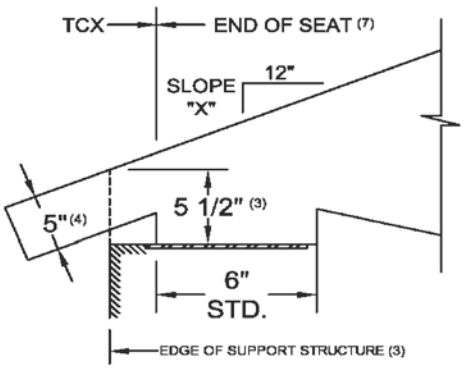

HIGH END W/ TOP CHORD EXTENSIONS

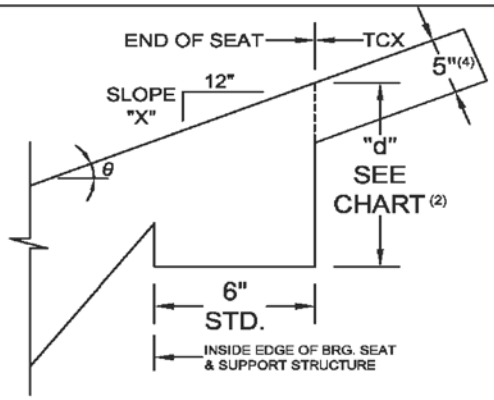

SLOPE "X" : 12	MINIMUM HIGH END SEAT DEPTH "d"
3/8	6
1/2	6
1	6 1/2
1 1/2	6 1/2
2	7
2 1/2	7
3	7 1/2
3 1/2	7 1/2
4	8
4 1/2	8 1/2
5	8 1/2
5 1/2	9
6	9 1/2
SEE NOTE (2) FOR SLOPE RATES GREATER THAN 6:12	

Notes:
(1) Depths shown are the minimum required for manufacturing of sloped seats. Depth may vary depending on actual bearing condition.
(2) $d = 1/2 + 5 / \cos\theta + 6 \tan\theta$
(3) Clearance must be checked at outer edge of support. Increase bearing seat depth as required to allow passage of 5" deep extension.
(4) If extension depth greater than 5" is required, increase bearing depths accordingly.
(5) Add 2 1/2" to seat depth at 18 thru 25 chord section numbers. Consult with joist manufacturer for information when TCXs are present.
(6) If slope is 1/4 : 12 or less, sloped seats may not required.
(7) Required bearing seat depth shall be determined at END OF SEAT.
(8) Also refer to SJI Specification 104.4(a) for special considerations of joist end reaction location.

HIGH STRENGTH

ECONOMICAL

DESIGN – Vulcraft LH & DLH Series long span steel joists are designed in accordance with the specifications of the Steel Joist Institute.

ACCESSORIES see page 69.

ROOF SPANS TO 144'-0

FLOOR SPANS TO 120'-0

PAINT – Vulcraft joists receive a shop-coat of rust inhibitive primer whose performance characteristics conform to those of the Steel Joist Institute specification 102.4.

SPECIFICATIONS see page 76.

LH & DLH SERIES DETAILS

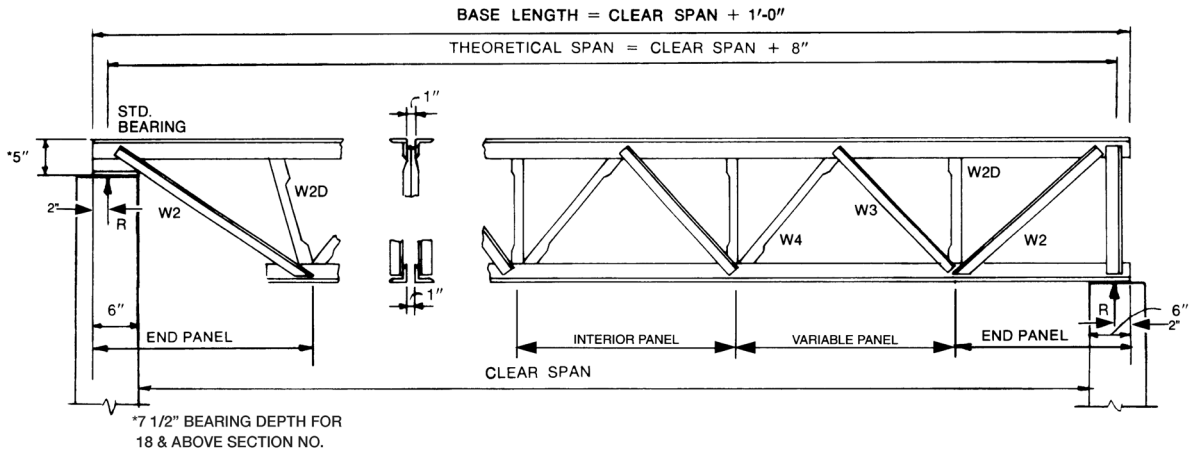

K, LH, and DLH SERIES JOISTS
MAXIMUM JOIST SPACING FOR DIAGONAL BRIDGING

JOIST DEPTH	BRIDGING ANGLE SIZE – (EQUAL LEG ANGLE)							
	1 x 7/64 r = 0.20"	1-1/4 x 7/64 r = 0.25"	1-1/2 x 7/64 r = 0.30"	1-3/4 x 7/64 r = 0.35"	2 x 1/8 r = 0.40"	2 ½ x 5/32 r = 0.50"	3 x 3/16 r = 0.60"	3 ½ x 1/4 r = 0.70"
in.	ft.- in.	ft.- in.	ft.- in.	ft.- in.	ft.- in.	ft.- in.	ft.- in.	ft.- in.
32"	6'-1"	7'-10"	9'-7"	11'-4"	13'-0"	16'-5"	19'-9"	23'-2"
36"	5'-11"	7'-9"	9'-6"	11'-3"	12'-11"	16'-4"	19'-9"	23'-1"
40"	5'-9"	7'-7"	9'-5"	11'-2"	12'-10"	16'-4"	19'-8"	23'-1"
44"	5'-6"	7'-5"	9'-3"	11'-0"	12'-9"	16'-3"	19'-7"	23'-0"
48"	5'-4"	7'-3"	9'-2"	10'-11"	12'-8"	16'-2"	19'-7"	22'-11"
52"	5'-0"	7'-1"	9'-0"	10'-10"	12'-7"	16'-1"	19'-6"	22'-11"
56"	4'-9"	6'-10"	8'-10"	10'-8"	12'-5"	16'-0"	19'-5"	22'-10"
60"	4'-4"	6'-8"	8'-7"	10'-6"	12'-4"	15'-10"	19'-4"	22'-9"
64"	**	6'-4"	8 -5"	10'-4"	12'-2"	15'-9"	19'-3"	22'-8"
68"	**	6'-1"	8'-2"	10'-2"	12'-0"	15'-8"	19'-2"	22'-7"
72"	**	5'-9"	8'-0"	10'-0"	11'-10"	15'-6"	19'-1"	22'-6"
80"	**	5'-0"	7'-5"	9'-6"	11'-6"	15'-3"	18'-10"	22'-4"
88"		**	6'-9"	9'-0"	11'-1"	14'-11"	18'-7"	22'-1"
96"		**	6'-0"	8'-5"	10'-8"	14'-7"	18'-4"	21'-11"
104"			**	7'-9"	10'-1"	14'-2"	18'-0"	21'-8"
112"			**	7'-0"	9'-6"	13'-9"	17'-8"	21'-4"
120"				**	8'-9"	13'-4"	17'-3"	21'-1"

****INTERPOLATION BELOW THE MINIMUM VALUES SHOWN IS NOT ALLOWED.**
SEE TABLE 2.7-3 FOR MINIMUM JOIST SPACE FOR DIAGONAL ONLY BRIDGING.

NOTES: 1. Special designed LH and DLH can be supplied in longer lengths as required.

2. Additional bridging may be required when joists support standing seam roof decks. The specifying professional should require that the joist manufacturer check the system and provide bridging as required to adequately brace the joists against lateral movement. For bridging requirements due to uplift pressures refer to sect. 104.12.

TABLE 2.7-1b

LH-SERIES JOISTS
MAXIMUM JOIST SPACING FOR HORIZONTAL BRIDGING
SPANS OVER 60 ft. (18.3 m) REQUIRE BOLTED DIAGONAL BRIDGING

Joist Section Number*	Force P_{br} lbs (N)	BRIDGING MATERIAL SIZE** Equal Leg Angles					
		1 x 7/64 (25 x 3 mm) r = 0.20" (5.08 mm)	**1-1/4 x 7/64 (32 x 3 mm) r = 0.25" (6.35 mm)**	**1-1/2 x 7/64 (38 x 3 mm) r = 0.30" (7.62 mm)**	**1-3/4 x 7/64 (45 x 3 mm) r = 0.35" (8.89 mm)**	**2 x 1/8 (52 x 3 mm) r = 0.40" (10.16 mm)**	**2-1/2 x 5/32 (64 x 4 mm) r = 0.50" (12.70 mm)**
		ft.-in. (mm)	ft.-in. (mm)	ft.-in. (mm)	ft.-in. (mm)	ft.-in. (mm)	ft.-in. (mm)
02 to 03, incl.	400 (1779)	4'–7" (1397)	6'–3" (1905)	7'–6" (2286)	8'–9" (2667)	10'–0" (3048)	12'–6" (3810)
04 to 05, incl.	550 (2447)	3'–11"(1194)	5'–6" (1676)	7'–4" (2235)	8'–9" (2667)	10'–0" (3048)	12'–6" (3810)
06 to 08, incl.	750 (3336)		4'–9" (1448)	6'–3" (1905)	7'–11" (2413)	10'–0" (3048)	12'–6" (3810)
09	850 (3781)		4'–5" (1346)	5'–10" (1778)	7'–5" (2261)	9'–9" (2972)	12'–6" (3810)
10	900 (4003)		4'–4" (1321)	5'–8" (1727)	7'–3" (2210)	9'–5" (2870)	12'–6" (3810)
11	950 (4226)		4'–2" (1270)	5'–7" (1702)	7'–0" (2134)	9'–2" (2794)	12'–6" (3810)
12	1100 (4893)		3'-11" (1194)	5'–2" (1575)	6'–8" (2032)	8'–6" (2591)	12'-6" (3810)
13	1200 (5338)		3'-9" (1143)	4'–11" (1499)	6'–3" (1905)	8'-2" (2489)	12-6" (3810)
14	1300 (5783)			4'-9" (1448)	6'-0" (1829)	7'-10" (2388)	12'-4" (3759)
15	1450 (6450)			4'-6" (1372)	5'-8" (1727)	7'-5" (2261)	11'-8" (3556)
16 to 17, incl.	1850 (8229)			4'-0" (1219)	5'-0" (1524)	6'-7"(2007)	10'-4" (3150)
18 to 20, incl.	2000 (8896)			3'-10" (1168)	4'-10" (1473)	6'-4" (1930)	9'-11" (3023)
21 to 22, incl.	2500 (11120)				4'-4" (1321)	5'-8" (1727)	8'-10" (2692)
23 to 24, incl.	3100 (13789)				3'-10" (1168)	5'-1" (1549)	7'-11" (2413)
25	3500 (15569)					4'-9"(1448)	7'-6" (2286)

* Refer to last two digit(s) of Joist Designation

TABLE 104.4-1

JOIST SECTION NUMBER*	MINIMUM BEARING LENGTH
02 to 06 incl	2 ½" (64 mm)
07 to 17 incl	4" (102 mm)
18 to 25 incl	6" (152 mm)
*Last two digits of joist designation shown in Load Table.	

TABLE 104.5-1

LH & DLH BRIDGING SPACING		
JOIST SECTION NUMBER*	**MAXIMUM SPACING OF LINES OF TOP CHORD BRIDGING**	**NOMINAL HORIZONTAL BRACING FORCE****
		lbs
02 to 03 incl	10'-0″	400
04 to 05 incl	11'-0″	550
06 to 08 incl	13'-0″ up to 39'-0”, then 15’-0”	750
09	13'-0″ up to 39'-0”, then 16’-0”	850
10	14’-0” up to 42’-0”, then 18’-0”	900
11	15’-0” up to 45‘-0”, then 18’-0”	950
12	17'-0″ up to 51’-0”, then 18’-6”	1100
13	18’-0” up to 54’-0”, then 21’-0”	1200
14	19'-0″ up to 57’-0”, then 21’-6”	1300
15	21'-0″ up to 63’-0”, then 24’-6”	1450
16 to 17 incl	22'-0″ up to 66’-0”, then 25’-0”	1850
18 to 20 incl	26’-0”	2000
21 to 22 incl	30’-0”	2500
23 to 24 incl	30’-0”	3100
25	30’-0”	3500

Number of lines of bridging is based on joist span dimensions.
*Last two digits of joist designation shown in load table.
**Nominal bracing force is unfactored and shown value is for horizontal bridging only. For horizontal bracing force for X bridging divide value shown by 4.

TABLE 104.7-1

JOIST SECTION NUMBER*	FILLET WELD	BEARING SEAT BOLTS FOR ERECTION
02 to 06 incl.	2– 3/16” x 2” (5 x 51 mm)	2– 3/4” (19 mm) A307
07 to 17 incl	2– 1/4” x 2” (6 x 51 mm)	2– 3/4” (19 mm) A307
18 to 25 incl	2– 1/4” x 4” (6 x 102 mm)	2– 3/4” (19 mm) A325
*Last two digits of joist designation shown in load table.		

TABLE 2.7-3

LH AND DLH SERIES JOISTS HORIZONTAL PLUS DIAGONAL BRIDGING REQUIREMENTS		
JOIST DEPTH	**MINIMUM JOIST SPACE FOR DIAGONAL ONLY BRIDGING** **(0.70 x DEPTH)***	**HORIZONTAL AND DIAGONAL MINIMUM ANGLE SIZE REQUIRED** FOR JOIST SPACING < (0.70 X DEPTH) ANDJOIST SPANS > 60'-0"
in.	**ft.- in.**	**in.**
52"	3'- 0"	1" x 1" x 7/64"
56"	3'- 3"	1" x 1" x 7/64"
60"	3'- 6"	1" x 1" x 7/64"
64"	3'- 8"	1¼" x 1¼" x 7/64"
68"	3'-11"	1¼" x 1¼" x 7/64"
72"	4'- 2"	1¼" x 1¼" x 7/64"
80"	4'- 8"	1¼" x 1¼" x 7/64"
88"	5'- 1"	1 ½" x 1 ½" x 7/64"
96"	5'- 7"	1 ½" x 1 ½" x 7/64"
104"	6'- 0"	1 ¾" x 1 ¾" x 7/64"
112"	6'- 6"	1 ¾" x 1 ¾" x 7/64"
120"	7'- 0"	2" x 2" x1/8"
*NOTE: WHEN THE JOIST SPACING IS LESS THAN 0.70 x JOIST DEPTH, BOLTED HORIZONTAL BRIDGING SHALL BE USED IN ADDITION TO DIAGONAL BRIDGING.		

TABLE 2.7-4

BOLT SIZES WHICH MEET BOLTED BRIDGING CONNECTION REQUIREMENTS		
JOIST SERIES	**SECTION NUMBER***	**BOLT DIAMETER**
K	ALL	3/8" A307
LH/DLH	2 – 12	3/8" A307
LH/DLH	13 – 17	1/2" A307
DLH	18 – 20	5/8" A307
DLH	21 – 22	5/8" A325
DLH	23 – 25	3/4" A325
*REFER TO LAST DIGIT(S) OF JOIST DESIGNATION NOTE: WASHERS SHALL BE USED WITH SLOTTED OR OVERSIZED HOLES. BOLTS SHALL BE TIGHTENED TO A MINIMUM SNUG TIGHT CONDITION.		

STANDARD SPECIFICATION
FOR LONGSPAN STEEL JOISTS, LH-SERIES AND DEEP LONGSPAN STEEL JOISTS, DLH-SERIES

Adopted by the Steel Joist Institute May 10, 2006
Revised to May 18, 2010, Effective December 31, 2010

SECTION 100.
SCOPE AND DEFINITIONS

100.1 SCOPE

The *Standard Specification for Longspan Steel Joists,* **LH**-*Series and Deep Longspan Steel Joists,* **DLH**-*Series*, hereafter referred to as the Specification, covers the design, manufacture, application, and erection stability and handling of Longspan Steel Joists **LH**-Series, and Deep Longspan Steel Joists, **DLH**-Series in buildings or other structures, where other structures are defined as those structures designed, manufactured, and erected in a manner similar to buildings.. **LH**- and **DLH**-Series joists shall be designed using Allowable Stress Design (ASD) or Load and Resistance Factor Design (LRFD) in accordance with this Specification. Steel joists shall be erected in accordance with the Occupational Safety and Health Administration (OSHA), U.S. Department of Labor, Code of Federal Regulations 29CFR Part 1926 Safety Standards for Steel Erection. The erection of **LH**- and **DLH**-Series joists 144 ft. (43.9 m) or less is governed by Section 1926.757 Open Web Steel Joists and joists over this length by Section 1926.756 Beams and Columns.

This Specification includes Sections 100 through 105.

100.2 DEFINITION

The term "Longspan Steel Joists **LH-**Series and Deep Longspan Steel Joists **DLH**-Series", as used herein, refers to open web, load-carrying members utilizing hot-rolled or cold-formed steel, including cold-formed steel whose yield strength has been attained by cold working, suitable for the direct support of floors and roof slabs or decks. The **LH**-Series joists have been standardized in depths from 18 inches (457 mm) through 48 inches (1219 mm), for spans up through 96 feet (29260 mm). The **DLH**-Series joists have been standardized in depths from 52 inches (1321 mm) through 120 inches (3048 mm), for spans up through 240 feet (73150 mm).

The **LH**- and **DLH**-Series standard joist designations are determined by their nominal depth at the center of the span, followed by the letters **LH** or **DLH** as appropriate, and then by the chord size designation assigned. The chord size designations range from 02 to 25. Therefore, as a performance based specification, the **LH**- and **DLH**-Series standard joist designations listed in the following Standard Load Tables shall support the uniformly distributed loads as provided in the appropriate tables:

Standard LRFD Load Table Longspan Steel Joists, **LH**-Series – U.S. Customary Units
Standard ASD Load Table Longspan Steel Joists, **LH**-Series – U.S. Customary Units
Standard LRFD Load Table Deep Longspan Steel Joists, **DLH**-Series – U.S. Customary Units
Standard ASD Load Table Deep Longspan Steel Joists, **DLH**-Series – U.S. Customary Units

American National Standard SJI-LH/DLH-2010

And the following Standard Load Tables published electronically at www.steeljoist.org/loadtables

Standard LRFD Load Table Longspan Steel Joists, **LH**-Series – S.I. Units
Standard ASD Load Table Longspan Steel Joists, **LH**-Series – S.I. Units
Standard LRFD Load Table Deep Longspan Steel Joists, **DLH**-Series – S.I. Units
Standard ASD Load Table Deep Longspan Steel Joists, **DLH**-Series – S.I. Units

An alternate method of specifying a standard **LH**-Series joist is to provide the designation in a "load/load" sequence. The format used is dd**LH**tl/ll where:

dd is the nominal depth of the joist in inches (mm)
tl is the total uniformly distributed load applied to the joist top chord, plf (kN/m)
ll is the uniform live load for which the deflection shall be checked and limited as required by the Specification, plf (kN/m)

The load/load **LH**-Series joists can be specified in depths from 14 inches (356 mm) through 120 inches (3048 mm) and spans from 14 feet (4267 mm) up through 240 feet (73152 mm). The maximum uniformly distributed load-carrying capacity of 2400 plf (35.03 kN/m) in ASD and 3600 plf (52.54 kN/m) in LRFD has been established for this alternate **LH**-Series format. The maximum capacity for any given load/load **LH**-Series joist is a function of span, depth and chord size.

Six standard types of **LH**- and **DLH**-Series joists are designed and manufactured. These types are underslung (top chord bearing) or square-ended (bottom chord bearing), with parallel chords or with single or double pitched top chords. A pitch of the joist top chord up to 1/2 inch per foot (1:24) is allowed. The standard joist designation depth shall be the depth at mid-span.

100.3 STRUCTURAL DESIGN DRAWINGS AND SPECIFICATIONS

The design drawings and specifications shall meet the requirements in the *Code of Standard Practice for Steel Joists and Joist Girders*, except for deviations specifically identified in the design drawings and/or specifications.

SECTION 101.
REFERENCED SPECIFICATIONS, CODES AND STANDARDS

101.1 REFERENCES

American Institute of Steel Construction, Inc. (AISC)

ANSI/AISC 360-10 *Specification for Structural Steel Buildings*

American Iron and Steel Institute (AISI)

ANSI/AISI S100-2007 *North American Specification for Design of Cold-Formed Steel Structural Members*

ANSI/AISI S100-07/S1-09 , *Supplement No. 1 to the North American Specification for the Design of Cold-Formed Steel Structural Members*, 2007 Edition

ANSI/AISI S100-07/S2-10 , *Supplement No. 2 to the North American Specification for the Design of Cold-Formed Steel Structural Members*, 2007 Edition

American National Standard SJI-LH/DLH-2010

American Society of Testing and Materials, ASTM International (ASTM)

ASTM A6/A6M-09, Standard Specification for General Requirements for Rolled Structural Steel Bars, Plates, Shapes, and Sheet Piling

ASTM A36/A36M-08, Standard Specification for Carbon Structural Steel

ASTM A242/242M-04 (2009), Standard Specification for High-Strength Low-Alloy Structural Steel

ASTM A307-07b, Standard Specification for Carbon Steel Bolts and Studs, 60 000 PSI Tensile Strength

ASTM A325/325M-09, Standard Specification for Structural Bolts, Steel, Heat Treated, 120/105 ksi [830 MPa] Minimum Tensile Strength

ASTM A370-09ae1, Standard Test Methods and Definitions for Mechanical Testing of Steel Products

ASTM A500/A500M-07, Standard Specification for Cold-Formed Welded and Seamless Carbon Steel Structural Tubing in Rounds and Shapes

ASTM A529/A529M-05, Standard Specification for High-Strength Carbon-Manganese Steel of Structural Quality

ASTM A572/A572M-07, Standard Specification for High-Strength Low-Alloy Columbium-Vanadium Structural Steel

ASTM A588/A588M-05, Standard Specification for High-Strength Low-Alloy Structural Steel, up to 50 ksi [345 MPa] Minimum Yield Point, with Atmospheric Corrosion Resistance

ASTM A606/A606M-09, Standard Specification for Steel, Sheet and Strip, High-Strength, Low-Alloy, Hot-Rolled and Cold-Rolled, with Improved Atmospheric Corrosion Resistance

ASTM A992/A992M-06a, Standard Specification for Structural Steel Shapes
ASTM A1008/A1008M-09, Standard Specification for Steel, Sheet, Cold-Rolled, Carbon, Structural, High-Strength Low-Alloy and High-Strength Low-Alloy with Improved Formability, Solution Hardened, and Bake Hardenable

ASTM A1011/A1011M-09a, Standard Specification for Steel, Sheet and Strip, Hot-Rolled, Carbon, Structural, High-Strength Low-Alloy, High-Strength Low-Alloy with Improved Formability, and Ultra-High Strength

American Welding Society (AWS)

AWS A5.1/A5.1M-2004, Specification for Carbon Steel Electrodes for Shielded Metal Arc Welding

AWS A5.5/A5.5M:2006, Specification for Low-Alloy Steel Electrodes for Shielded Metal Arc Welding

AWS A5.17/A5.17M-97:R2007, Specification for Carbon Steel Electrodes and Fluxes for Submerged Arc Welding

AWS A5.18/A5.18M:2005, Specification for Carbon Steel Electrodes and Rods for Gas Shielded Arc Welding

AWS A5.20/A5.20M:2005, Specification for Carbon Steel Electrodes for Flux Cored Arc Welding

AWS A5.23/A5.23M:2007, Specification for Low-Alloy Steel Electrodes and Fluxes for Submerged Arc Welding

AWS A5.28/A5.28M:2005, Specification for Low-Alloy Steel Electrodes and Rods for Gas Shielded Arc Welding

AWS A5.29/A5.29M:2005, Specification for Low Alloy Steel Electrodes for Flux Cored Arc Welding

101.2 OTHER REFERENCES

The following references are non-ANSI Standard documents and as such, are provided solely as sources of commentary or additional information related to topics in this Specification:

American Society of Civil Engineers (ASCE)

SEI/ASCE 7-10 *Minimum Design Loads for Buildings and Other Structures*

Federal Register, Department of Labor, Occupational Safety and Health Administration (2001), 29 CFR Part 1926 Safety Standards for Steel Erection; Final Rule, §1926.757 Open Web Steel Joists - January 18, 2001, Washington, D.C.

American National Standard SJI-LH/DLH-2010

Steel Joist Institute (SJI)

SJI-COSP-2010, *Code of Standard Practice for Steel Joists and Joist Girders*

Technical Digest No. 3 (2007), *Structural Design of Steel Joist Roofs to Resist Ponding Loads*

Technical Digest No. 5 (1988), *Vibration of Steel Joist-Concrete Slab Floors*

Technical Digest No. 6 (2011), *Structural Design of Steel Joist Roofs to Resist Uplift Loads*

Technical Digest No. 8 (2008), *Welding of Open Web Steel Joists and Joist Girders*

Technical Digest No. 9 (2008), *Handling and Erection of Steel Joists and Joist Girders*

Technical Digest No. 10 (2003), *Design of Fire Resistive Assemblies with Steel Joists*

Technical Digest No. 11 (2007), *Design of Lateral Load Resisting Frames Using Steel Joists and Joist Girders*

Technical Digest No. 12 (2007), *Evaluation and Modification of Open Web Steel Joists and Joist Girders*

Steel Structures Painting Council (SSPC) (2000), *Steel Structures Painting Manual, Volume 2, Systems and Specifications*, Paint Specification No. 15, Steel Joist Shop Primer, May 1, 1999, Pittsburgh, PA.

SECTION 102.
MATERIALS

102.1 STEEL

The steel used in the manufacture of **LH**- and **DLH**-Series joists shall conform to one of the following ASTM Specifications:

- Carbon Structural Steel, ASTM A36/A36M.
- High-Strength Low-Alloy Structural Steel, ASTM A242/A242M.
- Cold-Formed Welded and Seamless Carbon Steel Structural Tubing in Rounds and Shapes, ASTM A500/A500M.
- High-Strength Carbon-Manganese Steel of Structural Quality, ASTM A529/A529M.
- High-Strength Low-Alloy Columbium-Vanadium Structural Steel, ASTM A572/A572M.
- High-Strength Low-Alloy Structural Steel up to 50 ksi [345 MPa] Minimum Yield Point with Atmospheric Corrosion Resistance, ASTM A588/A588M.
- Steel, Sheet and Strip, High-Strength, Low-Alloy, Hot-Rolled and Cold-Rolled, with Improved Atmospheric Corrosion Resistance, ASTM A606/A606M.
- Structural Steel Shapes, ASTM A992/A992M.
- Steel, Sheet, Cold-Rolled, Carbon, Structural, High-Strength Low-Alloy, High-Strength Low-Alloy with Improved Formability, Solution Hardened, and Bake Hardenable, ASTM A1008/A1008M.
- Steel, Sheet and Strip, Hot-Rolled, Carbon, Structural, High-Strength Low-Alloy, High-Strength Low-Alloy with Improved Formability, and Ultra High Strength, ASTM A1011/A1011M.

or shall be of suitable quality ordered or produced to other than the listed specifications, provided that such material in the state used for final assembly and manufacture is weldable and is proved by tests performed by the producer or manufacturer to have the properties specified in Section 102.2.

American National Standard SJI-LH/DLH-2010

102.2 MECHANICAL PROPERTIES

Steel used for **LH**- and **DLH**-Series joists shall have a minimum yield strength determined in accordance with one of the procedures specified in this section, which is equal to the yield strength* assumed in the design.

> *The term "Yield Strength" as used herein shall designate the yield level of a material as determined by the applicable method outlined in paragraph 13.1 “Yield Point”, and in paragraph 13.2 “Yield Strength”, of ASTM A370, *Standard Test Methods and Definitions for Mechanical Testing of Steel Products*, or as specified in paragraph 102.2 of this specification.

Evidence that the steel furnished meets or exceeds the design yield strength shall, if requested, be provided in the form of an affidavit or by witnessed or certified test reports.

For material used without consideration of increase in yield strength resulting from cold forming, the specimens shall be taken from as-rolled material. In the case of material, the mechanical properties of which conform to the requirements of one of the listed specifications, the test specimens and procedures shall conform to those of such specifications and to ASTM A370.

In the case of material, the mechanical properties of which do not conform to the requirements of one of the listed specifications, the test specimens and procedures shall conform to the applicable requirements of ASTM A370, and the specimens shall exhibit a yield strength equal to or exceeding the design yield strength and an elongation of not less than (a) 20 percent in 2 inches (51 millimeters) for sheet and strip, or (b) 18 percent in 8 inches (203 millimeters) for plates, shapes and bars with adjustments for thickness for plates, shapes and bars as prescribed in ASTM A36/A36M, A242/A242M, A500/A500M, A529/A529M, A572/A572M, A588/A588M, A992/A992M whichever specification is applicable, on the basis of design yield strength.

The number of tests shall be as prescribed in ASTM A6/A6M for plates, shapes, and bars; and ASTM A606/A606M, A1008/A1008M and A1011/A1011M for sheet and strip.

If as-formed strength is utilized, the test reports shall show the results of tests performed on full section specimens in accordance with the provisions of the AISI North American Specifications for the Design of Cold-Formed Steel Structural Members. They shall also indicate compliance with these provisions and with the following additional requirements:

a) The yield strength calculated from the test data shall equal or exceed the design yield strength.

b) Where tension tests are made for acceptance and control purposes, the tensile strength shall be at least 8 percent greater than the yield strength of the section.

c) Where compression tests are used for acceptance and control purposes, the specimen shall withstand a gross shortening of 2 percent of its original length without cracking. The length of the specimen shall be not greater than 20 times the least radius of gyration.

d) If any test specimen fails to pass the requirements of the subparagraphs (a), (b), or (c) above, as applicable, two retests shall be made of specimens from the same lot. Failure of one of the retest specimens to meet such requirements shall be the cause for rejection of the lot represented by the specimens.

102.3 WELDING ELECTRODES

The following electrodes shall be used for arc welding:

a) For connected members both having a specified minimum yield strength greater than 36 ksi (250 MPa).

AWS A5.1: E70XX
AWS A5.5: E70XX-X
AWS A5.17: F7XX–EXXX, F7XX–ECXXX flux electrode combination
AWS A5.18: ER70S-X, E70C-XC, E70C-XM

AWS A5.20: E7XT-X, E7XT-XM
AWS A5.23: F7XX–EXXX-XX, F7XX–ECXXX-XX
AWS A5.28: ER70S-XXX, E70C-XXX
AWS A5.29: E7XTX-X, E7XTX-XM

b) For connected members both having a specified minimum yield strength of 36 ksi (250 MPa) or one having a specified minimum yield strength of 36 ksi (250 MPa), and the other having a specified minimum yield strength greater than 36 ksi (250 MPa).

AWS A5.1: E60XX
AWS A5.17: F6XX-EXXX, F6XX-ECXXX flux electrode combination
AWS A5.20: E6XT-X, E6XT-XM
AWS A5.29: E6XTX-X, E6XTX-XM
or any of those listed in Section 102.3(a).

Other welding methods, providing equivalent strength as demonstrated by tests, shall be permitted to be used.

102.4 PAINT

The standard shop paint is intended to protect the steel for only a short period of exposure in ordinary atmospheric conditions and shall be considered an impermanent and provisional coating.

When specified, the standard shop paint shall conform to one of the following:

a) Steel Structures Painting Council Specification, SSPC No. 15.

b) Or, shall be a shop paint which meets the minimum performance requirements of the above listed specification.

SECTION 103.
DESIGN AND MANUFACTURE

103.1 METHOD

Joists shall be designed in accordance with this specification as simply-supported trusses supporting a floor or roof deck so constructed as to brace the top chord of the joists against lateral buckling. Where any applicable design feature is not specifically covered herein, the design shall be in accordance with the following specifications:

a) Where the steel used consists of hot-rolled shapes, bars or plates, use the American Institute of Steel Construction, *Specification for Structural Steel Buildings*.

b) For members which are cold-formed from sheet or strip steel, use the American Iron and Steel Institute, *North American Specification for the Design of Cold-Formed Steel Structural Members.*

Design Basis:

Steel joist designs shall be in accordance with the provisions in this Standard Specification using Load and Resistance Factor Design (LRFD) or Allowable Strength Design (ASD) as specified by the **specifying professional** for the project.

Loads, Forces and Load Combinations:

The loads and forces used for the steel joist design shall be calculated by the **specifying professional** in accordance with the applicable building code and specified and provided on the contract drawings.

American National Standard SJI-LH/DLH-2010

The load combinations shall be specified by the **specifying professional** on the contract drawings in accordance with the applicable building code or, in the absence of a building code, the load combinations shall be those stipulated in SEI/ASCE 7. For LRFD designs, the load combinations in SEI/ASCE 7, Section 2.3 apply. For ASD designs, the load combinations in SEI/ASCE 7, Section 2.4 apply.

103.2 DESIGN AND ALLOWABLE STRESSES

Design Using Load and Resistance Factor Design (LRFD)

Joists shall have their components so proportioned that the required stresses, f_u, shall not exceed ϕF_n where:

f_u = required stress ksi (MPa)
F_n = nominal stress ksi (MPa)
ϕ = resistance factor
ϕF_n = design stress

Design Using Allowable Strength Design (ASD)

Joists shall have their components so proportioned that the required stresses, f, shall not exceed F_n / Ω where:

f = required stress ksi (MPa)
F_n = nominal stress ksi (MPa)
Ω = safety factor
F_n/Ω = allowable stress

Stresses:

For Chords: The calculation of design or allowable stress shall be based on a yield strength, F_y, of the material used in manufacturing equal to 50 ksi (345 MPa).

For all other joist elements: The calculation of design or allowable stress shall be based on a yield strength, F_y, of the material used in manufacturing, but shall not be less than 36 ksi (250 MPa) or greater than 50 ksi (345 MPa).

Note: Yield strengths greater than 50 ksi shall not be used for the design of any joist members.

(a) Tension: ϕ_t = 0.90 (LRFD), Ω_t = 1.67 (ASD)

Design Stress = $0.9F_y$ (LRFD) (103.2-1)

Allowable Stress = $0.6F_y$ (ASD) (103.2-2)

(b) Compression: ϕ_c = 0.90 (LRFD), Ω_c = 1.67 (ASD)

Design Stress = $0.9F_{cr}$ (LRFD) (103.2-3)

Allowable Stress = $0.6F_{cr}$ (ASD) (103.2-4)

For members with $k\ell/r \le 4.71\sqrt{E/QF_y}$

$$F_{cr} = Q\left[0.658^{\left(QF_y/F_e\right)}\right]F_y \qquad (103.2\text{-}5)$$

American National Standard SJI-LH/DLH-2010

For members with $k\ell/r > 4.71\sqrt{E/QF_y}$

$$F_{cr} = 0.877F_e \qquad (103.2\text{-}6)$$

Where F_e = Elastic buckling stress determined in accordance with Equation 103.2-7

$$F_e = \frac{\pi^2 E}{\left(k\ell/r\right)^2} \qquad (103.2\text{-}7)$$

In the above equations, ℓ is taken as the distance in inches (millimeters) between panel points for the chord members and the appropriate length for a compression or tension web member, and r is the corresponding least radius of gyration of the member or any component thereof. E is equal to 29,000 ksi (200,000 MPa).

For hot-rolled sections and cold formed angles, Q is the full reduction factor for slender compression members as defined in the AISC *Specification for Structural Steel Buildings*.except that when the first primary compression web member is a crimped-end angle member, whether hot-rolled or cold formed:.

$$Q = [5.25/(w/t)] + t \leq 1.0 \qquad (103.2\text{-}8)$$

Where: w = angle leg length, inches
t = angle leg thickness, inches

or,

$$Q = [5.25/(w/t)] + (t/25.4) \leq 1.0 \qquad (103.2\text{-}9)$$

Where: w = angle leg length, millimeters
t = angle leg thickness, millimeters

For all other cold-formed sections the method of calculating the nominal compression strength is given in the AISI, *North American Specification for the Design of Cold-Formed Steel Structural Members*.

(c) Bending: $\phi_b = 0.90$ (LRFD), $\Omega_b = 1.67$ (ASD)

Bending calculations are to be based on using the elastic section modulus.

For chords and web members other than solid rounds: $F_n = F_y$

Design Stress = $\phi_b F_n = 0.9F_y$ (LRFD) (103.2-10)

Allowable Stress = $F_n/\Omega_b = 0.6F_y$ (ASD) (103.2-11)

For web members of solid round cross section: $F_n = 1.6\ F_y$

Design Stress = $\phi_b F_n = 1.45F_y$ (LRFD) (103.2-12)

Allowable Stress = $F_n/\Omega_b = 0.95F_y$ (ASD) (103.2-13)

For bearing plates used in joist seats: $F_n = 1.5\ F_y$

Design Stress = $\phi_b F_n = 1.35F_y$ (LRFD) (103.2-14)

Allowable Stress = $F_n/\Omega_b = 0.90F_y$ (ASD) (103.2-15)

(d) Weld Strength:

Shear at throat of fillet welds, flare bevel groove welds, partial joint penetration groove welds, and plug/slot welds:

Nominal Shear Stress = $F_{nw} = 0.6F_{exx}$ (103.2-16)

LRFD: $\phi_w = 0.75$

Design Shear Strength = $\phi R_n = \phi_w F_{nw} A = 0.45F_{exx} A_w$ (103.2-17)

ASD: $\Omega_w = 2.0$

Allowable Shear Strength = $R_n/\Omega_w = F_{nw}A/\Omega_w = 0.3F_{exx} A_w$ (103.2-18)

Made with E70 series electrodes or F7XX-EXXX flux-electrode combinations F_{exx} = 70 ksi (483 MPa)

Made with E60 series electrodes or F6XX-EXXX flux-electrode combinations F_{exx} = 60 ksi (414 MPa)

A_w = effective throat area, where:

For fillet welds, A_w = effective throat area, (other design methods demonstrated to provide sufficient strength by testing shall be permitted to be used);

For flare bevel groove welds, the effective weld area is based on a weld throat width, T, where:

T (inches) = 0.12D + 0.11 (103.2-19)

Where: D = web diameter, inches

or,

T (mm) = 0.12D + 2.8 (103.2-20)

Where: D = web diameter, mm

For plug/slot welds, A_w = cross-sectional area of the hole or slot in the plane of the faying surface provided that the hole or slot meets the requirements of the American Institute of Steel Construction *Specification for Structural Steel Buildings* (and as described in SJI Technical Digest No. 8, "Welding of Open-Web Steel Joists and Joist Girders").

Strength of resistance welds and complete-joint-penetration groove or butt welds in tension or compression (only when the stress is normal to the weld axis) is equal to the base metal strength:

$\phi_t = \phi_c = 0.90$ (LRFD) $\Omega_t = \Omega_c = 1.67$ (ASD)

Design Stress = $0.9\ F_y$ (LRFD) (103.2-21)

Allowable Stress = $0.6\ F_y$ (ASD) (103.2-22)

American National Standard SJI-LH/DLH-2010

103.3 MAXIMUM SLENDERNESS RATIOS

The slenderness ratios, $1.0\ell/r$ and $1.0\ell_s/r$ of members as a whole or any component part shall not exceed the values given in Table 103.3-1, Parts A.

The effective slenderness ratio, $k\ell/r$ to be used in calculating the nominal stresses, F_{cr} and F'_e, is the largest value as determined from Table 103.3-1, Parts B and C.

In compression members when fillers or ties are used, they shall be spaced so that the ℓ_s/r_z ratio of each component does not exceed the governing ℓ/r ratio of the member as a whole. The terms used in Table 103.3-1 are defined as follows:

ℓ = length center-to-center of panel points, except ℓ = 36 inches (914 millimeters) for calculating ℓ/r_y of top chord member, in. (mm).

ℓ_s = maximum length center-to-center between panel point and filler (tie), or between adjacent fillers (ties), in. (mm).

r_x = member radius of gyration in the plane of the joist, in. (mm).

r_y = member radius of gyration out of the plane of the joist, in. (mm).

r_z = least radius of gyration of a member component, in. (mm).

Compression web members are those web members subject to compressive axial loads under gravity loading.

Tension web members are those web members subject to tension axial loads under gravity loading, and which may be subject to compressive axial loads under alternate loading conditions, such as net uplift.

For top chords, the end panel(s) are the panels between the bearing seat and the first primary interior panel point comprised of at least two intersecting web members.

American National Standard SJI-LH/DLH-2010

TABLE 103.3-1
MAXIMUM AND EFFECTIVE SLENDERNESS RATIOS

	Description	$k\ell/r_x$	$k\ell/r_y$	$k\ell/r_z$	$k\ell_s/r_z$
I	TOP CHORD INTERIOR PANELS				
	A. The slenderness ratios, $1.0\ell/r$ and $1.0\ell_s/r$, of members as a whole or any component part shall not exceed 90.				
	B. The effective slenderness ratio, $k\ell/r$, to determine F_{cr} where k is:				
	1. With fillers or ties	0.75	0.94	---	1.0
	2. Without fillers or ties	---	---	0.75	---
	3. Single component members	0.75	0.94	---	---
	C. For bending, the effective slenderness ratio, $k\ell/r$, to determine F'_e where k is:	0.75	---	---	---
II	TOP CHORD END PANELS, ALL BOTTOM CHORD PANELS				
	A. The slenderness ratios, $1.0\ell/r$ and $1.0\ell_s/r$, of members as a whole or any component part shall not exceed 120 for Top Chords, or 240 for Bottom Chords.				
	B. The effective slenderness ratio, $k\ell/r$, to determine F_{cr} where k is:				
	1. With fillers or ties	1.0	0.94	---	1.0
	2. Without fillers or ties	---	---	1.0	---
	3. Single component members	1.0	0.94	---	---
	C. For bending, the effective slenderness ratio, $k\ell/r$, to determine F'_e where k is:	1.0	---	---	---
III	TENSION WEB MEMBERS				
	A. The slenderness ratios, $1.0\ell/r$ and $1.0\ell_s/r$, of members as a whole or any component part shall not exceed 240.				
	B. For end web members subject to compression, the effective slenderness ratio, $k\ell/r$, to determine F_{cr} where k is:				
	1. With fillers or ties	0.75	1.0	---	1.0
	2. Without fillers or ties	---	---	1.0	---
	3. Single component members	0.75	0.8	---	---
IV	COMPRESSION WEB MEMBERS				
	A. The slenderness ratios, $1.0\ell/r$ and $1.0\ell_s/r$, of members as a whole or any component part shall not exceed 200.				
	B. The effective slenderness ratio, $k\ell/r$, to determine F_{cr} where k is:				
	1. With fillers or ties	0.75	1.0	---	1.0
	2. Without fillers or ties	---	---	1.0	---
	3. Single component members	0.75	1.0	---	---

American National Standard SJI-LH/DLH-2010

103.4 MEMBERS

(a) Chords

The bottom chord shall be designed as an axially loaded tension member.

The radius of gyration of the top chord about its vertical axis shall not be less than:

$$r_y \geq \ell_{br} \Big/ \left(124 + 0.67\, d_j + 28 \frac{d_j}{L} \right), \text{ in.} \qquad (103.4\text{-}1a)$$

$$r_y \geq \ell_{br} \Big/ \left(124 + 0.026\, d_j + 0.34 \frac{d_j}{L} \right), \text{ mm} \qquad (103.4\text{-}1b)$$

or,

$$r_y \geq \ell_{br} / 170 \qquad (103.4\text{-}2)$$

Where:

d_j is the steel joist depth, in. (mm)

L is the joist span length, ft. (m)

r_y is the out-of-plane radius of gyration of the top chord, in. (mm)

ℓ_{br} is the spacing in inches (millimeters) between lines of bridging as specified in Section 104.5(d).

The top chord shall be considered as stayed laterally by the floor slab or roof deck provided the requirements of Section 104.9(e) of this specification are met.

The top chord shall be designed as a continuous member subject to combined axial and bending stresses and shall be so proportioned that:

For **LRFD**:

at the panel point:

$$f_{au} + f_{bu} \leq 0.9 F_y \qquad (103.4\text{-}3)$$

at the mid panel:

for, $\dfrac{f_{au}}{\phi_c F_{cr}} \geq 0.2$,

$$\frac{f_{au}}{\phi_c F_{cr}} + \frac{8}{9}\left[\frac{C_m f_{bu}}{\left[1 - \left(\dfrac{f_{au}}{\phi_c F'_e} \right) \right] Q \phi_b F_y} \right] \leq 1.0 \qquad (103.4\text{-}4)$$

for, $\frac{f_{au}}{\phi_c F_{cr}} < 0.2$,

$$\left(\frac{f_{au}}{2\phi_c F_{cr}}\right) + \left[\frac{C_m f_{bu}}{\left[1-\left(\frac{f_{au}}{\phi_c F'_e}\right)\right] Q\phi_b F_y}\right] \le 1.0 \qquad (103.4\text{-}5)$$

f_{au} = P_u/A = Required compressive stress, ksi (MPa)
P_u = Required axial strength using LRFD load combinations, kips (N)
f_{bu} = M_u/S = Required bending stress at the location under consideration, ksi (MPa)
M_u = Required flexural strength using LRFD load combinations, kip-in. (N-mm)
S = Elastic Section Modulus, in.^{3} (mm^3)
F_{cr} = Nominal axial compressive stress in ksi (MPa) based on ℓ/r as defined in Section 103.2(b),
C_m = 1 - 0.3 $f_{au}/\phi F'_e$ for end panels
C_m = 1 - 0.4 $f_{au}/\phi F'_e$ for interior panels
F_y = Specified minimum yield strength, ksi (MPa)
F'_e = $\frac{\pi^2 E}{(K\ell/r_x)^2}$, ksi (MPa)

Where ℓ is the panel length, in inches (millimeters), as defined in Section 103.2(b) and r_x is the radius of gyration about the axis of bending.

Q = Form factor defined in Section 103.2(b)
A = Area of the top chord, in.^{2} (mm^2)

For **ASD**:

at the panel point:

$$f_a + f_b \le 0.6F_y \qquad (103.4\text{-}6)$$

at the mid panel:

for, $\frac{f_a}{F_a} \ge 0.2$,

$$\frac{f_a}{F_a} + \frac{8}{9}\left[\frac{C_m f_b}{\left[1-\left(\frac{1.67f_a}{F'_e}\right)\right] QF_b}\right] \le 1.0 \qquad (103.4\text{-}7)$$

for $\frac{f_a}{F_a} < 0.2$,

$$\left(\frac{f_a}{2F_a}\right) + \left[\frac{C_m f_b}{\left[1-\left(\frac{1.67 f_a}{F'_e}\right)\right] Q F_b}\right] \le 1.0 \qquad (103.4\text{-}8)$$

f_a = P/A required compressive stress, ksi (MPa)
P = Required axial strength using ASD load combinations, kips (N)
f_b = M/S = required bending stress at the location under consideration, ksi (MPa)
M = Required flexural strength using ASD load combinations, k-in. (N-mm)
F_a = Allowable axial compressive stress based on ℓ/r as defined in Section 103.2(b), ksi (MPa)
F_b = Allowable bending stress; $0.6F_y$, ksi (MPa)
C_m = 1 - 0.50 f_a/F'_e for end panels
C_m = 1 - 0.67 f_a/F'_e for interior panels

The top chord and bottom chord shall be designed such that at each joint:

$f_{vmod} \le \phi_v f_n$ (LRFD, ϕ = 1.00) (103.4-9)

$f_{vmod} \le f_n/\Omega_v$ (ASD, Ω = 1.50) (103.4-10)

f_n = nominal shear stress = $0.6F_y$, ksi (MPa)
f_t = axial stress = P/A, ksi (MPa)
f_v = shear stress = V/bt, ksi (MPa)
f_{vmod} = modified shear stress = $(\frac{1}{2})\left(f_t^2 + 4f_v^2\right)^{1/2}$
b = length of vertical part(s) of cross section, in. (mm)
t = thickness of vertical part(s) of cross section, in. (mm)

It shall not be necessary to design the top chord and bottom chord for the modified shear stress when a round bar web member is continuous through a joint. The minimum required shear of Section 103.4(b) 25 percent of the end reaction) shall not be required when evaluating Equation 103.4-9 or 103.4-10.

(b) Web

The vertical shears to be used in the design of the web members shall be determined from full uniform loading, but such vertical shears shall be not less than 25 percent of the end reaction.

Interior vertical web members used in modified Warren type web systems shall be designed to resist the gravity loads supported by the member plus an additional axial load of ½ of 1.0 percent of the top chord axial force.

(c) Joist Extensions

Joist extensions are defined as one of three types, top chord extensions (TCX), extended ends, or full depth cantilevers.

Design criteria for joist extensions shall be specified using one of the following methods:

(1) A joist extension shall be designed for the load from the Standard Load Tables based on the design length and designation of the specified joist. In the absence of other design information, the joist manufacturer shall design the joist extension for this loading as a default.

(2) A loading diagram shall be provided for the joist extension. The diagram shall include the magnitude and location of the loads to be supported, as well as the appropriate load combinations.

Any deflection requirements or limits due to the accompanying loads and load combinations on the joist extension shall be provided by the **specifying professional**, regardless of the method used to specify the extension. Unless otherwise specified, the joist manufacturer shall check the extension for the specified deflection limit under uniform live load acting simultaneously on both the joist base span and the extension.

The joist manufacturer shall consider the effects of joist extension loading on the base span of the joist. This includes carrying the design bending moment due to the loading on the extension into the top chord end panel(s), and the effect on the overall joist chord and web axial forces.

Bracing of joist extensions shall be clearly indicated on the structural drawings.

103.5 CONNECTIONS

(a) Methods

Joist connections and splices shall be made by attaching the members to one another by arc or resistance welding or other accredited methods.

(1) Welded Connections

a) Selected welds shall be inspected visually by the manufacturer. Prior to this inspection, weld slag shall be removed.
b) Cracks are not acceptable and shall be repaired.
c) Thorough fusion shall exist between weld and base metal for the required design length of the weld; such fusion shall be verified by visual inspection.
d) Unfilled weld craters shall not be included in the design length of the weld.
e) Undercut shall not exceed 1/16 inch (2 mm) for welds oriented parallel to the principal stress.
f) The sum of surface (piping) porosity diameters shall not exceed 1/16 inch (2 mm) in any 1 inch (25 mm) of design weld length.
g) Weld spatter that does not interfere with paint coverage is acceptable.

(2) Welded Connections for Crimped-End Angle Web Members

The connection of each end of a crimped angle web member to each side of the chord shall consist of a weld group made of more than a single line of weld. The design weld length shall include, at minimum, an end return of two times the nominal weld size.

(3) Welding Program

Manufacturers shall have a program for establishing weld procedures and operator qualification, and for weld sampling and testing. (See Technical Digest 8 - Welding of Open Web Steel Joists and Joist Girders.)

(4) Weld Inspection by Outside Agencies (See Section 104.13 of this specification)

The agency shall arrange for visual inspection to determine that welds meet the acceptance standards of Section 103.5(a)(1) above. Ultrasonic, X-ray, and magnetic particle testing are inappropriate for joists due to the configurations of the components and welds.

(b) Strength

(1) Joint Connections – Joint connections shall develop the maximum force due to any of the design loads, but not less than 50 percent of the strength of the member in tension or compression, whichever force is the controlling factor in the selection of the member.

(2) Shop Splices – Shop splices shall be permitted to occur at any point in chord or web members. Splices shall be designed for the member force, but not less than 50 percent of the member strength. All component parts comprising the cross section of the chord or web member (including reinforcing plates, rods, etc.) at the point of the splice, shall develop an ultimate tensile force of at least 1.2 times the product of the yield strength and the full design area of the chord or web. The "full design area" is the minimum required area such that the required stress will be less than the design (LRFD) or allowable (ASD) stress.

(c) Field Splices

Field Splices shall be designed by the manufacturer and shall be either bolted or welded. Splices shall be designed for the member force, but not less than 50 percent of the member strength.

(d) Eccentricity

Members connected at a joint shall have their center of gravity lines meet at a point, if practical. Eccentricity on either side of the neutral axis of chord members shall be permitted to be neglected when it does not exceed the distance between the neutral axis and the back of the chord. Otherwise, provision shall be made for the stresses due to eccentricity. Ends of joists shall be proportioned to resist bending produced by eccentricity at the support.

In those cases where a single angle compression member is attached to the outside of the stem of a tee or double angle chord, due consideration shall be given to eccentricity.

103.6 CAMBER

Joists shall have approximate camber in accordance with the following:

TABLE 103.6-1

Top Chord Length		Approximate Camber	
20'-0″	(6096 mm)	1/4″	(6 mm)
30'-0″	(9144 mm)	3/8″	(10 mm)
40'-0″	(12192 mm)	5/8″	(16 mm)
50'-0″	(15240 mm)	1″	(25 mm)
60'-0″	(18288 mm)	1 1/2″	(38 mm)
70'-0″	(21336 mm)	2″	(51 mm)
80'-0″	(24384 mm)	2 3/4″	(70 mm)
90'-0″	(27432 mm)	3 1/2″	(89 mm)
100'-0″	(30480 mm)	4 1/4″	(108 mm)

For joist lengths exceeding 100'-0" a camber equal to Span/300 shall be used. The **specifying professional** shall give consideration to coordinating joist camber with adjacent framing.

American National Standard SJI-LH/DLH-2010

103.7 VERIFICATION OF DESIGN AND MANUFACTURE

(a) Design Calculations

Companies manufacturing any **LH-** or **DLH**-Series Joists shall submit design data to the Steel Joist Institute (or an independent agency approved by the Steel Joist Institute) for verification of compliance with the SJI Specifications. Design data shall be submitted in detail and in the format specified by the Institute.

(b) In-Plant Inspections

Each manufacturer shall verify his ability to manufacture **LH**- and **DLH**-Series Joists through periodic In-Plant Inspections. Inspections shall be performed by an independent agency approved by the Steel Joist Institute. The frequency, manner of inspection, and manner of reporting shall be determined by the Steel Joist Institute. The plant inspections are not a guarantee of the quality of any specific joists; this responsibility lies fully and solely with the individual manufacturer.

SECTION 104.
APPLICATION

104.1 USAGE

This specification shall apply to any type of structure where floors and roofs are to be supported directly by steel joists installed as hereinafter specified. Where joists are used other than on simple spans under uniformly distributed loading as prescribed in Section 103.1, they shall be investigated and modified when necessary to limit the required stresses to those listed in Section 103.2.

When a rigid connection of the bottom chord is to be made to a column or other structural support, the joist is then no longer simply supported, and the system shall be investigated for continuous frame action by the **specifying professional**. The magnitude and location of all loads and forces shall be provided on the structural drawings. The **specifying professional** shall design the supporting structure, including the design of columns, connections, and moment plates*. This design shall account for the stresses caused by lateral forces and the stresses due to connecting the bottom chord to the column or other structural support.

The designed detail of a rigid type connection and moment plates shall be shown on the structural drawings by the **specifying professional**. The moment plates shall be furnished by other than the joist manufacturer.

*For further reference, refer to Steel Joist Institute Technical Digest No. 11, “Design of Lateral Load Resisting Frames Using Steel Joists and Joist Girders”

104.2 SPAN

The span of a longspan or deep longspan joist shall not exceed 24 times its depth.

104.3 DEPTH

Joists shall have either parallel chords or a top chord pitch of up to 1/2 inch per foot (1:24). The joist designation depth shall be the depth at mid-span.

American National Standard SJI-LH/DLH-2010

104.4 END SUPPORTS

(a) Masonry and Concrete

A **LH**- or **DLH**-Series Joist end supported by masonry or concrete shall bear on steel bearing plates and shall be designed as steel bearing. Due consideration of the end reactions and all other vertical or lateral forces shall be taken by the **specifying professional** in the design of the steel bearing plate and the masonry or concrete. The ends of **LH**- and **DLH**-Series Joists shall extend a distance of not less than 6 inches (152 mm) over the masonry or concrete support unless it is deemed necessary to bear less than 6 inches (152 mm) over the support. Special consideration shall then be given to the design of the steel bearing plate and the masonry or concrete by the **specifying professional**. **LH**- and **DLH**-Series Joists shall be anchored to the steel bearing plate and shall bear a minimum of 4 inches (102 mm) on the plate.

The steel bearing plate shall be located not more than 1/2 inch (13 mm) from the face of the wall, otherwise special consideration shall be given to the design of the steel bearing plate and the masonry or concrete by the **specifying professional**. When the **specifying professional** requires the joist reaction to occur at or near the centerline of the wall or other support, then a note shall be placed on the contract drawings specifying this requirement and the specified bearing seat depth shall be increased accordingly. If the joist reaction is to occur more than 4 inches (102 mm) from the face of the wall or other support, the required bearing seat depth shall be the minimum seat depth plus a dimension at least equal to the distance the joist reaction is to occur beyond 4 inches (102 mm).

The steel bearing plate shall not be less than 9 inches (229 mm) wide perpendicular to the length of the joist. The plate is to be designed by the **specifying professional** and shall be furnished by other than the joist manufacturer.

(b) Steel

Due consideration of the end reactions and all other vertical and lateral forces shall be taken by the **specifying professional** in the design of the steel support. The ends of **LH**- and **DLH**-Series Joists shall extend a distance over the steel supports not less than that shown in Table 104.4-1.

TABLE 104.4-1

JOIST SECTION NUMBER*	MINIMUM BEARING LENGTH
02 to 06 incl	2 ½" (64 mm)
07 to 17 incl	4" (102 mm)
18 to 25 incl	6" (152 mm)
*Last two digits of joist designation shown in Load Table.	

Where deemed necessary to butt opposite joists over a narrow steel support with bearing less than that noted above, special ends shall be specified, and such ends shall have positive attachment to the support, either by bolting or welding.

104.5 BRIDGING

Top and bottom chord bridging is required and shall consist of one or both of the following types:

(a) Horizontal

Horizontal bridging lines shall consist of continuous horizontal steel members. The ℓ/r ratio of the bridging member shall not exceed 300, where ℓ is the distance in inches (millimeters) between attachments and r is the least radius of gyration of the bridging member.

American National Standard SJI-LH/DLH-2010

(b) Diagonal

Diagonal bridging lines shall consist of cross-bracing with a ℓ/r ratio of not more than 200, where ℓ is the distance in inches (millimeters) between connections and r is the least radius of gyration of the bracing member. Where cross-bracing members are connected at their point of intersection, the ℓ distance shall be taken as the distance in inches (millimeters) between connections at the point of intersection of the bridging members and the connections to the chords of the joists.

(c) Bridging Lines

For spans up through 60 feet (18288 mm), welded horizontal bridging shall be permitted except where the row of bridging nearest the center is required to be bolted diagonal bridging as indicated by the **Red** shaded area in the Load Table.

For spans over 60 feet (18288 mm) bolted diagonal bridging shall be used as indicated by the **Blue** and **Gray** shaded areas of the Load Table. When the joist spacing is less than 0.70 x joist depth, bolted horizontal bridging shall be used in addition to bolted diagonal bridging.

(d) Quantity and Spacing

Bridging shall be properly spaced and anchored to support the decking and the employees prior to the attachment of the deck to the top chord. The maximum spacing of lines of bridging, ℓ_{brmax} shall be the lesser of,

$$\ell_{brmax} = \left(124 + 0.67\,d_j + 28\frac{d_j}{L}\right) r_y \text{, in.} \qquad (104.5\text{-}1a)$$

$$\ell_{brmax} = \left(124 + 0.026\,d_j + 0.34\frac{d_j}{L}\right) r_y \text{, mm} \qquad (104.5\text{-}1b)$$

or,

$$\ell_{brmax} = 170\,r_y \qquad (104.5\text{-}2)$$

Where:

d_j is the steel joist depth, in. (mm)

L is the joist span length, ft. (m)

r_y is the out-of-plane radius of gyration of the top chord, in. (mm)

The number of rows of top chord bridging shall not be less than as shown in Bridging Table 104.5-1 and the spacing shall meet the requirements of Equations 104.5-1 and 104.5-2. The number of rows of bottom chord bridging, including bridging required per Section 104.12, shall not be less than the number of top chord rows. Rows of bottom chord bridging are permitted to be spaced independently of rows of top chord bridging. The spacing of rows of bottom chord bridging shall meet the slenderness requirement of Section 103.4(a) and any specified strength requirements. For joist Section Number 21 and greater, bridging shall be installed near a bottom chord panel point or an extra web member shall be furnished to brace the bottom chord for the vertical component of the bridging force equal to the horizontal bracing force.

American National Standard SJI-LH/DLH-2010

(e) Sizing of Bridging

Horizontal and diagonal bridging shall be capable of resisting the nominal unfactored horizontal compressive force, P_{br} given in Equation 104.5-3.

$$P_{br} = 0.0025\ n\ A_t\ F_{construction}\ ,\ lbs\ (N) \qquad (104.5\text{-}3)$$

Where:

n = 8 for horizontal bridging

n = 2 for diagonal bridging

A_t = cross sectional area of joist top chord, $in.^2$ (mm^2)

$F_{construction}$ = assumed ultimate stress in top chord to resist construction loads

$$F_{construction} = \left(\frac{\pi^2 E}{\left(\frac{0.9 \ell_{brmax}}{r_y} \right)^2} \right) \geq 12.2 ksi \qquad (104.5\text{-}4a)$$

$$F_{construction} = \left(\frac{\pi^2 E}{\left(\frac{0.9 \ell_{brmax}}{r_y} \right)^2} \right) \geq 84.1 MPa \qquad (104.5\text{-}4b)$$

Where:

E = Modulus of Elasticity of steel = 29,000 ksi (200,000 MPa)

and $\frac{\ell_{brmax}}{r_y}$ is determined from Equations 104.5-1a, 104.5-1b or 104.5-2

The bridging nominal horizontal unfactored compressive forces, P_{br}, are summarized in Table 104.5-1.

American National Standard SJI-LH/DLH-2010

TABLE 104.5-1

JOIST SECTION NUMBER*	MAXIMUM SPACING OF LINES OF TOP CHORD BRIDGING	NOMINAL HORIZONTAL BRACING FORCE**	
		lbs	(N)
02 to 03 incl	10'-0″ (3048 mm)	400	(1779)
04 to 05 incl	11'-0″ (3353 mm)	550	(2447)
06 to 08 incl	13'-0″ (3962 mm) up to 39'-0" (11.89 m), then 15'-0" (4572 mm)	750	(3336)
09	13'-0″ (3962 mm) up to 39'-0" (11.89 m), then 16'-0" (4877 mm)	850	(3781)
10	14'-0" (4267 mm) up to 42'-0" (12.80 m), then 18'-0" (5486 mm)	900	(4003)
11	15'-0" (4572 mm) up to 45'-0" (13.72 m), then 18'-0" (5486 mm)	950	(4226)
12	17'-0″ (5182 mm) up to 51'-0" (15.54 m), then 18'-6" (5639 mm)	1100	(4893)
13	18'-0" (5486 mm) up to 54'-0" (16.46 m), then 21'-0" (6400 mm)	1200	(5338)
14	19'-0″ (5791 mm) up to 57'-0" (17.37 m), then 21'-6" (6553 mm)	1300	(5783)
15	21'-0″ (6400 mm) up to 63'-0" (19.20 m), then 24'-6" (7468 mm)	1450	(6450)
16 to 17 incl	22'-0″ (6706 mm) up to 66'-0" (20.12 m), then 25'-0" (7620 mm)	1850	(8229)
18 to 20 incl	26'-0" (7924 mm)	2000	(8896)
21 to 22 incl	30'-0" (9144 mm)	2500	(11120)
23 to 24 incl	30'-0" (9144 mm)	3100	(13789)
25	30'-0" (9144 mm)	3500	(15569)

Number of lines of bridging is based on joist span dimensions.
*Last two digits of joist designation shown in load table.
**Nominal bracing force is unfactored and shown value is for horizontal bridging only. For horizontal bracing force for X bridging divide value shown by 4.

(f) Connections

Connections to the joist chords shall be made by welding or mechanical means and shall be capable of resisting the nominal (unfactored) horizontal force, P_{br}, of Equation 104.5-3.

(g) Bottom Chord Bearing Joists

Where bottom chord bearing joists are utilized, a row of diagonal bridging shall be provided near the support(s). This bridging shall be installed and anchored before the hoisting cable(s) is released.

104.6 INSTALLATION OF BRIDGING

Bridging shall support the top and bottom chords against lateral movement during the construction period and shall hold the steel joists in the approximate position as shown on the joist placement plans.

The ends of all bridging lines terminating at walls or beams shall be anchored thereto.

104.7 BEARING SEAT ATTACHMENTS

(a) Masonry and Concrete

Ends of **LH**- and **DLH**-Series Joists resting on steel bearing plates on masonry or structural concrete shall be attached thereto, as shown in Table 104.7-1, with a minimum of two fillet welds, or with two bolts, or the equivalent.

(b) Steel

Ends of **LH**- and **DLH**-Series Joists resting on steel supports shall be attached thereto, as shown in Table 104.7-1, with two fillet welds, or with two 3/4 inch (19 mm) bolts, or the equivalent. When **LH**- and **DLH**-Series Joists are used to provide lateral stability to the supporting member, the final connection shall be made by welding or as designated by the **specifying professional**.

TABLE 104.7-1

JOIST SECTION NUMBER*	FILLET WELD	BEARING SEAT BOLTS FOR ERECTION
02 to 06 incl.	2– 3/16" x 2" (5 x 51 mm)	2– 3/4" (19 mm) A307
07 to 17 incl	2– 1/4" x 2" (6 x 51 mm)	2– 3/4" (19 mm) A307
18 to 25 incl	2– 1/4" x 4" (6 x 102 mm)	2– 3/4" (19 mm) A325
*Last two digits of joist designation shown in load table.		

(c) Uplift

Where uplift forces are a design consideration, roof joists shall be anchored to resist such forces (Refer to Section 104.12 Uplift).

104.8 JOIST SPACING

Joists shall be spaced so that the loading on each joist does not exceed the design load (LRFD or ASD) for the particular joist designation and span as shown in the applicable load tables.

104.9 FLOOR AND ROOF DECKS

(a) Material

Floor and roof decks shall be permitted to consist of cast-in-place or pre-cast concrete or gypsum, formed steel, wood, or other suitable material capable of supporting the required load at the specified joist spacing.

(b) Thickness

Cast-in-place slabs shall be not less than 2 inches (51 millimeters) thick.

(c) Centering

Centering for cast-in-place slabs shall be permitted to be ribbed metal lath, corrugated steel sheets, paper-backed welded wire fabric, removable centering or any other suitable material capable of supporting the slab at the designated joist spacing.

Centering shall not cause lateral displacement or damage to the top chord of joists during installation or removal of the centering or placing of the concrete.

(d) Bearing

Slabs or decks shall bear uniformly along the top chords of the joists.

(e) Attachments

The spacing of attachments along the joist top chord shall not exceed 36 inches (914 millimeters). Such attachments of the slab or deck to the top chords of joists shall be capable of resisting the forces given in Table 104.9-1.

TABLE 104.9-1

JOIST SECTION NUMBER*	NOMINAL FORCE REQUIRED**
02 to 04 incl.	120 lbs/ft. (1.75 kN/m)
05 to 09 incl.	150 lbs/ft. (2.19 kN/m)
10 to 17 incl.	200 lbs/ft. (2.92 kN/m)
18 and 19	250 lbs/ft. (3.65 kN/m)
20 and 21	300 lbs/ft. (4.38 kN/m)
22 to 24 incl.	420 lbs/ft. (6.13 kN/m)
25	520 lbs/ft. (7.59 kN/m)
*Last two digits of joist designation shown in Load Table. **Nominal bracing force is unfactored.	

(f) Wood Nailers

Where wood nailers are used, such nailers in conjunction with deck or slab shall be firmly attached to the top chords of the joists in conformance with Section 104.9(e).

(g) Joist With Standing Seam Roofing or Laterally Unbraced Top Chords

When the roof systems do not provide lateral stability for the joists in accordance with Section 104.9(e), i.e. as may be the case with standing seam roofs or skylights and openings, sufficient stability shall be provided to brace the joists laterally under the full design load. The compression chord shall resist the chord axial design force in the plane of the joist (i.e., x-x axis buckling) and out of the plane of the joist (i.e., y-y axis buckling). In any case where the attachment requirement of Section 104.9(e) is not achieved, out-of-plane strength shall be achieved by adjusting the bridging spacing and/or increasing the compression chord area and the y-axis radius of gyration. The effective slenderness ratio in the y-direction equals $0.94\ L/r_y$; where L is the bridging spacing in inches (millimeters). The maximum bridging spacing shall not exceed that specified in Section 104.5(d).

Horizontal bridging members attached to the compression chords and their anchorages shall be designed for a compressive axial force of $0.001nP + 0.004P\sqrt{n} \geq 0.0025nP$, where n is the number of joists between end anchors and P is the chord design force in kips (Newtons). The attachment force between the horizontal bridging member and the compression chord shall be 0.01P. Horizontal bridging attached to the tension chords shall be proportioned so that the slenderness ratio between attachments does not exceed 300. Diagonal bridging shall be proportioned so that the slenderness ratio between attachments does not exceed 200.

American National Standard SJI-LH/DLH-2010

104.10 DEFLECTION

The deflection due to the design live load shall not exceed the following:

Floors: 1/360 of span.
Roofs: 1/360 of span where a plaster ceiling is attached or suspended.
1/240 of span for all other cases.

The **specifying professional** shall give consideration to the effects of deflection and vibration* in the selection of joists.

*For further reference, refer to Steel Joist Institute Technical Digest 5, Vibration of Steel Joist-Concrete Slab Floors" and the Institute's Computer Vibration Program.

104.11 PONDING

The ponding investigation shall be performed by the **specifying professional**.

*For further reference, refer to Steel Joist Institute Technical Digest 3, “Structural Design of Steel Joist Roofs to Resist Ponding Loads” and the AISC Specification for Structural Steel Buildings.

104.12 UPLIFT

Where uplift forces due to wind are a design requirement, these forces shall be indicated on the contract drawings in terms of NET uplift in pounds per square foot (Pascals). The contract documents shall indicate if the net uplift is based upon LRFD or ASD. When these forces are specified, they shall be considered in the design of joists and/or bridging. A single line of **bottom chord** bridging shall be provided near the first bottom chord panel points whenever uplift due to wind forces is a design consideration.

*For further reference, refer to Steel Joist Institute Technical Digest 6, “Structural Design of Steel Joist Roofs to Resist Uplift Loads.”

104.13 INSPECTION

Joists shall be inspected by the manufacturer before shipment to verify compliance of materials and workmanship with the requirements of these specifications. If the purchaser wishes an inspection of the steel joists by someone other than the manufacturer's own inspectors, they shall be permitted to reserve the right to do so in their "Invitation to Bid" or the accompanying "Job Specifications".

Arrangements shall be made with the manufacturer for such inspection of the joists at the manufacturing shop by the purchaser's inspectors at purchaser's expense.

104.14 PARALLEL CHORD SLOPED JOISTS

The span of a parallel chord sloped joist shall be defined by the length along the slope. Minimum depth, load-carrying capacity, and bridging requirements shall be determined by the sloped definition of span. The Load Table capacity shall be the component normal to the joist.

American National Standard SJI-LH/DLH-2010

SECTION 105.
ERECTION STABILITY AND HANDLING*

When it is necessary for the erector to climb on the joists, extreme caution shall be exercised since unbridged joists exhibit some degree of instability under the erector's weight.

(a) Stability Requirements

1) Before an employee is allowed on the steel joist: BOTH ends of joists at columns (or joists designated as column joists) shall be attached to its supports. For all other joists a minimum of one end shall be attached before the employee is allowed on the joist. The attachment shall be in accordance with Section 104.7 – End Anchorage.

   When a bolted seat connection is used for erection purposes, as a minimum, the bolts shall be snug tightened. The snug tight condition is defined as the tightness that exists when all plies of a joint are in firm contact. This shall be attained by a few impacts of an impact wrench or the full effort of an employee using an ordinary spud wrench.

2) On steel joists that do not require erection bridging as shown by the unshaded area of the Load Tables, only one employee shall be allowed on the steel joist unless all bridging is installed and anchored.

3) Where the span of the steel joist is within the Red shaded area of the Load Table, the following shall apply:
   a) The row of bridging nearest the mid span of the steel joist shall be bolted diagonal erection bridging; and
   b) Hoisting cables shall not be released until this bolted diagonal erection bridging is installed and anchored, unless an alternate method of stabilizing the joist has been provided; and
   c) No more than one employee shall be allowed on these spans until all other bridging is installed and anchored.

4) Where the span of the steel joist is within the Blue shaded area of the Load Table, the following shall apply:
   a) All rows of bridging shall be bolted diagonal bridging; and
   b) Hoisting cables shall not be released until the two rows of bolted diagonal erection bridging nearest the third points of the steel joist are installed and anchored; and
   c) No more than two employees shall be allowed on these spans until all other bridging is installed and anchored.

5) Where the span of the steel joist is in the Gray shaded area of the Load Table, the following shall apply:
   a) All rows of bridging shall be bolted diagonal bridging; and
   b) Hoisting cables shall not be released until all bridging is installed and anchored; and
   c) No more than two employees shall be allowed on these spans until all other bridging is installed and anchored.

6) When permanent bridging terminus points cannot be used during erection, additional temporary bridging terminus points are required to provide lateral stability.

7) In the case of bottom chord bearing joists, the ends of the joist shall be restrained laterally per Section 104.5(g) before releasing the hoisting cables.

8) After the joist is straightened and plumbed, and all bridging is completely installed and anchored, the ends of the joists shall be fully connected to the supports in accordance with Section 104.7 - End Anchorage.

American National Standard SJI-LH/DLH-2010

(b) Landing and Placing Loads

1) Except as stated in paragraph 105(b)(3) of this section, no "construction loads"[1] shall be allowed on the steel joists until all bridging is installed and anchored, and all joist bearing ends are attached.

2) During the construction period, loads placed on the steel joists shall be distributed so as not to exceed the capacity of the steel joists.

3) The weight of a bundle of joist bridging shall not exceed a total of 1000 pounds (454 kilograms). The bundle of joist bridging shall be placed on a minimum of 3 steel joists that are secured at one end. The edge of the bridging bundle shall be positioned within 1 foot (0.30 m) of the secured end.

4) No bundle of deck shall be placed on steel joists until all bridging has been installed and anchored and all joist bearing ends attached, unless the following conditions are met:
   a) The contractor has first determined from a "qualified person"[2] and documented in a site-specific erection plan that the structure or portion of the structure is capable of supporting the load;
   b) The bundle of decking is placed on a minimum of 3 steel joists;
   c) The joists supporting the bundle of decking are attached at both ends;
   d) At least one row of bridging is installed and anchored;
   e) The total weight of the decking does not exceed 4000 pounds (1816 kilograms); and
   f) The edge of the bundle of decking shall be placed within 1 foot (0.30 meters) of the bearing surface of the joist end.

5) The edge of the construction load shall be placed within 1 foot (0.30 meters) of the bearing surface of the joist end.

(c) Field Welding

1) All field welding shall be performed in accordance with the contract documents. Field welding shall not damage the joists.

2) On cold-formed members whose yield strength has been attained by cold working, and whose as-formed strength is used in the design, the total length of weld at any one point shall not exceed 50 percent of the overall developed width of the cold-formed section.

(d) Handling

Particular attention shall be considered for the handling and erection of **LH**- and **DLH-**Series steel joists. Care shall be exercised at all times to avoid damage to the joists and accessories. Hoisting cables shall be attached at panel point locations and those locations shall be selected to minimize erection stresses.

Each joist shall be adequately braced laterally before any loads are applied. If lateral support is provided by bridging, the bridging lines as defined in Section 105(a), paragraphs 2, 3, 4 and 5 shall be anchored to prevent lateral movement.

(e) Fall Arrest Systems

Steel joists shall not be used as anchorage points for a fall arrest system unless written direction to do so is obtained from a "qualified person" [2].

*For further reference, refer to Steel Joist Institute Technical Digest 9, "Handling and Erection of Steel Joists and Joist Girders."

[1] See Federal Register, Department of Labor, Occupational Safety and Health Administration (2001), 29 CFR Part 1926 Safety Standards for Steel Erection; Final Rule, §1926.757 Open Web Steel Joists - January 18, 2001, Washington, D.C. for definition of "construction load".

[2] See Federal Register, Department of Labor, Occupational Safety and Health Administration (2001), 29 CFR Part 1926 Safety Standards for Steel Erection; Final Rule, §1926.757 Open Web Steel Joists - January 18, 2001, Washington, D.C. for definition of "qualified person".

American National Standard SJI-LH/DLH-2010

DEFINITION OF SPAN

(U. S. Customary Units)

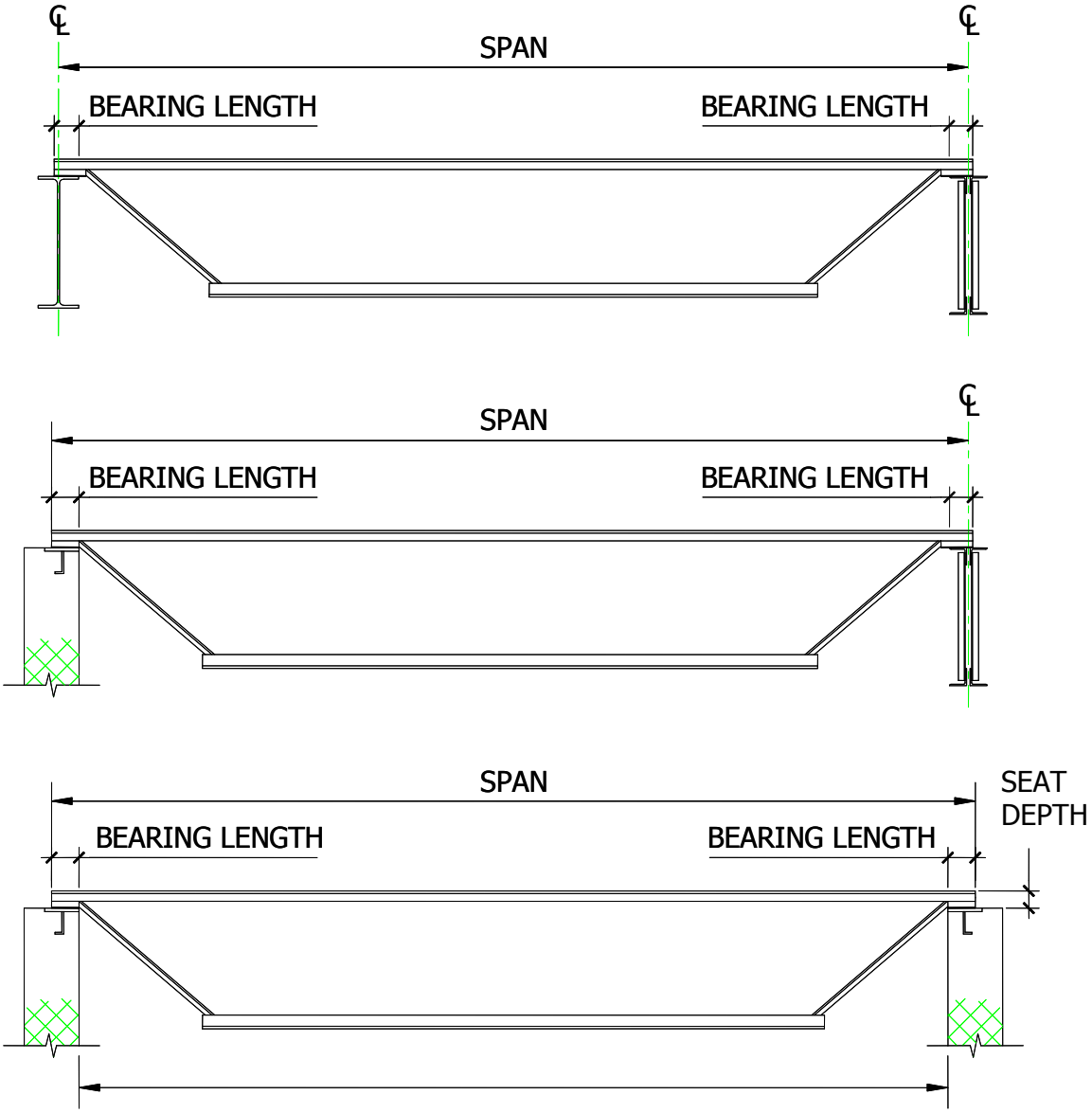

NOTES:

1) **DESIGN LENGTH = SPAN – 0.33 FT**
2) **BEARING LENGTH FOR STEEL SUPPORTS SHALL NOT BE LESS THAN SHOWN IN TABLE 104.4-1; FOR MASONRY AND CONCRETE NOT LESS THAN 6 INCHES**
3) **PARALLEL CHORD JOISTS INSTALLED TO A SLOPE GREATER THAN ½ INCH PER FOOT SHALL USE SPAN DEFINED BY THE LENGTH ALONG THE SLOPE.**

American National Standard SJI-LH/DLH-2010

STANDARD LRFD LOAD TABLE

LONGSPAN STEEL JOISTS, LH-SERIES

Based on a 50 ksi Maximum Yield Strength
Adopted by the Steel Joist Institute May 1, 2000
Revised to May 18, 2010 – Effective December 31, 2010

The **BLACK** figures in the Load Table give the TOTAL safe factored uniformly distributed load-carrying capacities, in pounds per linear foot, of **LRFD** **LH-**Series Steel Joists.

The approximate joist weights, in pounds per linear foot, given in the Load Table may be added to the other building weights to determine the unfactored DEAD load. In all cases the factored DEAD load, including the joist self-weight, must be deducted from the TOTAL load to determine the factored LIVE load. The approximate joist weights do not include accessories.

The **RED** figures in the Load Table represent the unfactored, uniform load, in pounds per linear foot, which will produce an approximate joist deflection of 1/360 of the span. This load can be linearly prorated to obtain the unfactored, uniform load for supplementary deflection criteria (i.e. an unfactored uniform load which will produce a joist deflection of 1/240 of the span may be obtained by multiplying the **RED** figures by 360/240). In no case shall the prorated, unfactored load exceed the unfactored TOTAL load-carrying capacity of the joist as given in the Standard **ASD** Load Table for Longspan Steel Joists, **LH**-Series.

The Load Table applies to joists with either parallel chords or pitched top chords. Joists can have a top chord pitch up to 1/2 inch per foot. If the pitch exceeds this limit, the Load Table does not apply. When top chords are pitched, the load-carrying capacities are determined by the nominal depth of the joists at the center of the span. Sloped parallel-chord joists shall use span as defined by the length along the slope.

Where the joist span is in the **RED** **SHADED** area of the Load Table, the row of bridging nearest the mid span shall be diagonal bridging with bolted connections at chords and intersections. Hoisting cables shall not be released until this row of bolted diagonal bridging is completely installed. The **RED** **SHADED** area extends up through 60'–0".

Where the joist span is in the **BLUE** **SHADED** area of the Load Table, all rows of bridging shall be diagonal bridging with bolted connections at chords and intersections. Hoisting cables shall not be released until the two rows of bridging nearest the third points are completely installed. The **BLUE** **SHADED** area starts after 60'–0" and extends up through 100'–0".

The approximate gross moment of inertia (not adjusted for shear deformation), in inches^4, of a standard joist listed in the Load Table may be determined as follows:

$I_j = 26.767(W)(L^3)(10^{-6})$, where W= **RED** figure in the Load Table, and
L = (span – 0.33) in feet.

Loads for span increments not explicitly given in the Load Table may be determined using linear interpolation between the load values given in adjacent span columns.

*The safe factored uniform load for the spans shown in the SAFE LOAD Column is equal to (SAFE LOAD) / (span). The TOTAL safe factored uniformly distributed load-carrying capacity, for spans less than those shown in the SAFE LOAD Column are given in the MAX LOAD Column.

To solve for an unfactored RED figure for spans shown in the SAFE LOAD Column (or lesser spans), multiply the unfactored RED figure of the shortest span shown in the Load Table by (the shortest span shown in the Load Table – 0.33 feet)^2 and divide by (the actual span – 0.33 feet)^2 . In no case shall the calculated unfactored load exceed the unfactored TOTAL load-carrying capacity of the joist as determined from the Standard **ASD** Load Table for Longspan Steel Joists, **LH-**Series.

LRFD

STANDARD LOAD TABLE FOR LONGSPAN STEEL JOISTS, LH-SERIES
Based on a 50 ksi Maximum Yield Strength - Loads Shown In Pounds Per Linear Foot (plf)

Joist Designation	Approx. Wt in Lbs. Per Linear Ft. (Joists only)	Depth in inches	Max Load (plf)	SAFE LOAD* in Lbs. Between	SPAN IN FEET															
			< 22	**22-25**	**26**	**27**	**28**	**29**	**30**	**31**	**32**	**33**	**34**	**35**	**36**					
18LH02	10	18	829	18240	702	663	627	586	550	517	486	459	433	409	388					
					313	284	259	234	212	193	175	160	147	135	124					
18LH03	11	18	919	20220	781	739	700	657	613	573	538	505	475	448	424					
					348	317	289	262	236	213	194	177	161	148	136					
18LH04	12	18	1070	23550	906	856	802	750	703	660	619	582	547	516	487					
					403	367	329	296	266	242	219	200	182	167	153					
18LH05	15	18	1210	26610	1026	972	921	871	814	762	714	672	631	595	562					
					454	414	378	345	311	282	256	233	212	195	179					
18LH06	15	18	1430	31470	1213	1123	1044	972	907	849	796	748	705	664	627					
					526	469	419	377	340	307	280	254	232	212	195					
18LH07	17	18	1485	32670	1260	1213	1170	1089	1017	952	892	838	789	744	703					
					553	513	476	428	386	349	317	288	264	241	222					
18LH08	19	18	1548	34050	1314	1264	1218	1176	1137	1075	1020	961	906	856	810					
					577	534	496	462	427	387	351	320	292	267	246					
18LH09	21	18	1658	36480	1404	1351	1302	1257	1215	1174	1138	1069	1006	949	897					
					616	571	527	491	458	418	380	346	316	289	266					
			< 23	**23-25**	**26**	**27**	**28**	**29**	**30**	**31**	**32**	**33**	**34**	**35**	**36**	**37**	**38**	**39**	**40**	
20LH02	10	20	747	17190	663	655	646	615	582	547	516	487	460	436	412	393	373	355	337	
					306	303	298	274	250	228	208	190	174	160	147	136	126	117	108	
20LH03	11	20	793	18240	703	694	687	678	651	621	592	558	528	499	474	448	424	403	382	
					337	333	317	302	280	258	238	218	200	184	169	156	143	133	123	
20LH04	12	20	972	22350	861	849	837	792	744	700	660	624	589	558	529	502	477	454	433	
					428	406	386	352	320	291	265	243	223	205	189	174	161	149	139	
20LH05	14	20	1045	24030	924	913	903	892	856	816	769	726	687	651	616	585	556	529	504	
					459	437	416	395	366	337	308	281	258	238	219	202	187	173	161	
20LH06	15	20	1394	32070	1233	1186	1144	1084	1018	952	894	840	790	745	703	666	631	598	568	
					606	561	521	477	427	386	351	320	292	267	246	226	209	192	178	
20LH07	17	20	1487	34200	1317	1267	1221	1179	1140	1066	1000	940	885	834	789	745	706	670	637	
					647	599	556	518	484	438	398	362	331	303	278	256	236	218	202	
20LH08	19	20	1534	35280	1362	1309	1263	1219	1177	1140	1083	1030	981	931	882	837	795	754	718	
					669	619	575	536	500	468	428	395	365	336	309	285	262	242	225	
20LH09	21	20	1679	38610	1485	1429	1377	1329	1284	1242	1203	1167	1132	1068	1009	954	904	858	816	
					729	675	626	581	542	507	475	437	399	366	336	309	285	264	244	
20LH10	23	20	1810	41640	1602	1542	1486	1434	1386	1341	1297	1258	1221	1186	1122	1060	1005	954	906	
					786	724	673	626	585	545	510	479	448	411	377	346	320	296	274	

LRFD

STANDARD LOAD TABLE FOR LONGSPAN STEEL JOISTS, LH-SERIES
Based on a 50 ksi Maximum Yield Strength - Loads Shown In Pounds Per Linear Foot (plf)

Joist Designation	Approx. Wt in Lbs. Per Linear Ft. (Joists only)	Depth in inches	Max Load (plf)	SAFELOAD* in Lbs. Between	SPAN IN FEET														
			< 29	29-33	34	35	36	37	38	39	40	41	42	43	44	45	46	47	48
24LH03	11	24	601	17430	513	508	504	484	460	439	418	400	382	366	351	336	322	310	298
					235	226	218	204	188	175	162	152	141	132	124	116	109	102	96
24LH04	12	24	737	21360	628	597	568	540	514	490	468	447	427	409	393	376	361	346	333
					288	265	246	227	210	195	182	169	158	148	138	130	122	114	107
24LH05	13	24	789	22890	673	669	660	628	598	570	544	520	496	475	456	436	420	403	387
					308	297	285	264	244	226	210	196	182	171	160	150	141	132	124
24LH06	16	24	1061	30780	906	868	832	795	756	720	685	655	625	598	571	546	522	501	480
					411	382	356	331	306	284	263	245	228	211	197	184	172	161	152
24LH07	17	24	1166	33810	997	957	919	882	847	811	774	736	702	669	639	610	583	559	535
					452	421	393	367	343	320	297	276	257	239	223	208	195	182	171
24LH08	18	24	1243	36060	1060	1015	973	933	895	858	817	780	745	712	682	652	625	600	576
					480	447	416	388	362	338	314	292	272	254	238	222	208	196	184
24LH09	21	24	1464	42450	1248	1212	1177	1146	1096	1044	994	948	903	861	822	786	751	720	690
					562	530	501	460	424	393	363	337	313	292	272	254	238	223	209
24LH10	23	24	1547	44850	1323	1284	1248	1213	1182	1152	1105	1053	1002	955	912	873	834	799	766
					596	559	528	500	474	439	406	378	351	326	304	285	266	249	234
24LH11	25	24	1630	47280	1390	1350	1312	1276	1243	1210	1180	1152	1101	1051	1006	963	924	885	850
					624	588	555	525	498	472	449	418	388	361	337	315	294	276	259
			< 34	34-41	42	43	44	45	46	47	48	49	50	51	52	53	54	55	56
28LH05	13	28	623	21180	505	484	465	445	429	412	397	382	367	355	342	330	319	309	298
					219	205	192	180	169	159	150	142	133	126	119	113	107	102	97
28LH06	16	28	828	28140	672	643	618	592	568	546	525	505	486	469	451	436	421	406	393
					289	270	253	238	223	209	197	186	175	166	156	148	140	133	126
28LH07	17	28	934	31770	757	726	696	667	640	615	591	568	547	528	508	490	474	457	442
					326	305	285	267	251	236	222	209	197	186	176	166	158	150	142
28LH08	18	28	1001	34020	810	775	744	712	684	657	630	604	580	556	535	516	496	478	462
					348	325	305	285	268	252	236	222	209	196	185	175	165	156	148
28LH09	21	28	1232	41880	1000	958	918	879	844	810	778	748	721	694	669	645	622	601	580
					428	400	375	351	329	309	291	274	258	243	228	216	204	193	183
28LH10	23	28	1347	45810	1093	1056	1018	976	937	900	864	831	799	769	742	715	690	666	643
					466	439	414	388	364	342	322	303	285	269	255	241	228	215	204
28LH11	25	28	1445	49140	1170	1143	1104	1066	1023	982	943	907	873	841	810	781	753	727	702
					498	475	448	423	397	373	351	331	312	294	278	263	249	236	223
28LH12	27	28	1587	53970	1285	1255	1227	1200	1173	1149	1105	1063	1023	984	948	913	880	849	819
					545	520	496	476	454	435	408	383	361	340	321	303	285	270	256
28LH13	30	28	1654	56250	1342	1311	1281	1252	1224	1198	1173	1149	1126	1083	1041	1002	964	930	897
					569	543	518	495	472	452	433	415	396	373	352	332	314	297	281
			< 39	39-46 47-49	50	51	52	53	54	55	56	57	58	59	60	61	62	63	64
32LH06	14	32	647	25230 25230	507	489	472	456	441	426	412	399	385	373	363	351	340	330	321
					211	199	189	179	169	161	153	145	138	131	125	119	114	108	104
32LH07	16	32	728	28380 28380	568	549	529	511	493	477	462	447	432	418	406	393	381	370	360
					235	223	211	200	189	179	170	162	154	146	140	133	127	121	116
32LH08	17	32	790	30810 30810	616	595	574	553	535	517	499	483	468	453	439	426	412	400	388
					255	242	229	216	205	194	184	175	167	159	151	144	137	131	125
32LH09	21	32	992	38670 38670	774	747	720	694	670	648	627	606	586	568	550	534	517	502	487
					319	302	285	270	256	243	230	219	208	198	189	180	172	164	157
32LH10	21	32	1096	42750 42750	856	825	796	768	742	717	693	667	645	624	603	583	564	546	529
					352	332	315	297	282	267	254	240	228	217	206	196	186	178	169
32LH11	24	32	1201	46830 46830	937	903	870	840	811	783	757	732	709	687	664	643	624	604	585
					385	363	343	325	308	292	277	263	251	239	227	216	206	196	187
32LH12	27	32	1409	54960 54960	1101	1068	1032	996	961	928	897	867	838	811	786	762	738	715	694
					450	428	406	384	364	345	327	311	295	281	267	255	243	232	221
32LH13	30	32	1572	61320 61320	1225	1201	1177	1156	1113	1072	1035	999	964	931	900	871	843	816	790
					500	480	461	444	420	397	376	354	336	319	304	288	275	262	249
32LH14	33	32	1618	63120 63120	1264	1239	1215	1192	1170	1149	1107	1069	1032	997	964	933	903	874	846
					515	495	476	458	440	417	395	374	355	337	321	304	290	276	264
32LH15	35	32	1673	65250 65250	1305	1279	1255	1231	1207	1186	1164	1144	1125	1087	1051	1017	984	952	924
					532	511	492	473	454	438	422	407	393	374	355	338	322	306	292
			< 43	43-46 47-56 57	58	59	60	61	62	63	64	65	66	67	68	69	70	71	72
36LH07	16	36	590	25350 25350	438	424	411	399	387	376	366	355	345	336	327	318	310	301	294
					177	168	160	153	146	140	134	128	122	117	112	107	103	99	95
36LH08	18	36	649	27900 27900	481	466	453	439	426	414	402	390	379	369	358	349	340	331	322
					194	185	176	168	160	153	146	140	134	128	123	118	113	109	104
36LH09	21	36	832	35760 35760	616	597	579	561	544	528	513	499	484	471	459	445	433	423	412
					247	235	224	214	204	195	186	179	171	163	157	150	144	138	133
36LH10	21	36	916	39390 39390	681	660	639	619	601	583	567	550	535	520	507	492	480	466	454
					273	260	248	236	225	215	206	197	188	180	173	165	159	152	146
36LH11	23	36	1000	42990 42990	742	720	697	676	657	637	618	601	583	567	552	537	522	508	495
					297	283	269	257	246	234	224	214	205	196	188	180	173	166	159
36LH12	25	36	1197	51450 51450	889	862	835	810	784	762	739	717	696	675	655	636	618	600	583
					354	338	322	307	292	279	267	255	243	232	222	213	204	195	187
36LH13	30	36	1407	60510 60510	1045	1012	981	951	922	894	868	843	819	796	774	753	732	712	694
					415	395	376	359	342	327	312	298	285	273	262	251	240	231	222
36LH14	36	36	1551	66690 66690	1152	1132	1093	1059	1024	991	961	931	903	876	850	826	802	780	757
					456	434	412	392	373	356	339	323	309	295	283	270	259	247	237
36LH15	36	36	1635	70320 70320	1213	1192	1171	1153	1116	1081	1047	1015	984	955	927	900	874	850	826
					480	464	448	434	413	394	375	358	342	327	312	299	286	274	263

LRFD

STANDARD LOAD TABLE FOR LONGSPAN STEEL JOISTS, LH-SERIES
Based on a 50 ksi Maximum Yield Strength - Loads Shown In Pounds Per Linear Foot (plf)

Joist Designation	Approx. Wt in Lbs. Per Linear Ft. (Joists Only)	Depth in inches	Max Load (plf)	SAFELOAD* in Lbs. Between		SPAN IN FEET														
			< 48	**48-59**	**60-65**	**66**	**67**	**68**	**69**	**70**	**71**	**72**	**73**	**74**	**75**	**76**	**77**	**78**	**79**	**80**
40LH08	16	40	521	25020	25020	381	370	361	351	342	333	325	316	309	301	294	288	280	274	267
						150	144	138	132	127	122	117	112	108	104	100	97	93	90	86
40LH09	21	40	685	32880	32880	498	484	472	459	447	436	424	414	403	394	384	375	366	358	349
						196	188	180	173	166	160	153	147	141	136	131	126	122	118	113
40LH10	21	40	754	36180	36180	550	535	520	507	493	481	469	457	445	435	424	414	403	393	382
						216	207	198	190	183	176	169	162	156	150	144	139	134	129	124
40LH11	22	40	823	39510	39510	598	582	567	552	537	523	510	498	484	472	462	450	439	429	418
						234	224	215	207	198	190	183	176	169	163	157	151	145	140	135
40LH12	25	40	1002	48090	48090	729	708	688	670	652	636	619	603	588	573	559	546	532	519	507
						285	273	261	251	241	231	222	213	205	197	189	182	176	169	163
40LH13	30	40	1181	56700	56700	859	835	813	792	771	750	730	712	694	676	660	643	628	613	598
						334	320	307	295	283	271	260	250	241	231	223	214	207	199	192
40LH14	35	40	1351	64830	64830	984	957	930	904	880	856	834	813	792	772	753	735	717	699	682
						383	367	351	336	323	309	297	285	273	263	252	243	233	225	216
40LH15	36	40	1511	72510	72510	1101	1068	1036	1006	978	949	924	898	874	850	828	807	786	766	747
						427	408	390	373	357	342	328	315	302	290	279	268	258	248	239
40LH16	42	40	1665	79920	79920	1212	1194	1176	1158	1141	1126	1095	1065	1036	1009	982	957	933	909	886
						469	455	441	428	416	404	387	371	356	342	329	316	304	292	282
			< 53	**53-59**	**60-73**	**74**	**75**	**76**	**77**	**78**	**79**	**80**	**81**	**82**	**83**	**84**	**85**	**86**	**87**	**88**
44LH09	19	44	569	30150	30150	408	397	388	379	370	363	354	346	339	331	324	316	310	303	297
						158	152	146	141	136	131	127	122	118	114	110	106	103	99	96
44LH10	21	44	628	33300	33300	450	439	429	418	408	399	390	381	373	364	357	349	342	334	327
						174	168	162	155	150	144	139	134	130	125	121	117	113	110	106
44LH11	22	44	679	36000	36000	487	475	465	453	442	433	423	414	403	396	387	378	370	363	354
						188	181	175	168	162	157	151	146	140	136	131	127	123	119	115
44LH12	25	44	842	44610	44610	603	589	574	561	547	534	520	508	496	484	472	462	450	439	430
						232	224	215	207	200	192	185	179	172	166	160	155	149	144	139
44LH13	30	44	998	52890	52890	715	699	681	666	649	634	619	606	592	579	565	553	541	529	519
						275	265	254	246	236	228	220	212	205	198	191	185	179	173	167
44LH14	31	44	1148	60870	60870	823	801	780	759	739	721	703	685	669	654	637	622	609	594	580
						315	302	291	279	268	259	249	240	231	223	215	207	200	193	187
44LH15	36	44	1336	70830	70830	958	934	912	889	868	847	826	805	786	768	750	732	714	699	682
						366	352	339	326	314	303	292	281	271	261	252	243	234	227	219
44LH16	42	44	1541	81660	81660	1105	1078	1051	1026	1002	978	955	933	912	891	870	852	832	814	796
						421	405	390	375	362	348	336	324	313	302	291	282	272	263	255
44LH17	47	44	1655	87690	87690	1185	1170	1153	1138	1125	1098	1072	1048	1024	1000	978	957	936	915	895
						450	438	426	415	405	390	376	363	351	338	327	316	305	295	285
			< 57	**57-59**	**60-81**	**82**	**83**	**84**	**85**	**86**	**87**	**88**	**89**	**90**	**91**	**92**	**93**	**94**	**95**	**96**
48LH10	21	48	528	30120	30120	369	361	354	346	339	331	325	318	312	306	300	294	288	282	277
						141	136	132	127	123	119	116	112	108	105	102	99	96	93	90
48LH11	22	48	573	32670	32670	399	390	382	373	366	358	351	343	337	330	324	318	312	306	300
						152	147	142	137	133	129	125	120	117	113	110	106	103	100	97
48LH12	25	48	724	41250	41250	504	493	483	472	462	451	442	433	424	415	408	399	391	384	376
						191	185	179	173	167	161	156	151	147	142	138	133	129	126	122
48LH13	29	48	867	49410	49410	603	589	576	564	552	540	529	517	507	498	487	477	468	459	450
						228	221	213	206	199	193	187	180	175	170	164	159	154	150	145
48LH14	32	48	1023	58290	58290	712	696	681	666	651	637	624	610	598	585	574	562	550	540	529
						269	260	251	243	234	227	220	212	206	199	193	187	181	176	171
48LH15	36	48	1176	67020	67020	817	799	781	765	748	732	717	702	687	672	658	645	633	619	607
						308	298	287	278	269	260	252	244	236	228	221	214	208	201	195
48LH16	42	48	1355	77250	77250	943	922	901	882	864	844	826	810	792	777	760	745	730	715	702
						355	343	331	320	310	299	289	280	271	263	255	247	239	232	225
48LH17	47	48	1522	86760	86760	1059	1035	1012	990	969	948	928	909	889	871	853	837	820	804	787
						397	383	371	358	346	335	324	314	304	294	285	276	268	260	252

American National Standard SJI-LH/DLH-2010

STANDARD ASD LOAD TABLE

LONGSPAN STEEL JOISTS, LH-SERIES

Based on a 50 ksi Maximum Yield Strength
Adopted by the Steel Joist Institute May 25, 1983
Revised to May 18, 2010 – Effective December 31, 2010

The **BLACK** figures in the Load Table give the TOTAL safe uniformly distributed load-carrying capacities, in pounds per linear foot, of **ASD** **LH-**Series Steel Joists.

The approximate joist weights, in pounds per linear foot, given in the Load Table may be added to the other building weights to determine the DEAD load. In all cases the DEAD load, including the joist self-weight, must be deducted from the TOTAL load to determine the LIVE load. The approximate joist weights do not include accessories.

The **RED** figures in the Load Table represent the uniform load, in pounds per linear foot, which will produce an approximate joist deflection of 1/360 of the span. This load can be linearly prorated to obtain the uniform load for supplementary deflection criteria (i.e. a uniform load that will produce a joist deflection of 1/240 of the span may be obtained by multiplying the **RED** figures by 360/240). In no case shall the prorated load exceed the TOTAL load-carrying capacity of the joist.

The Load Table applies to joists with either parallel chords or pitched top chords. Joists can have a top chord pitch up to 1/2 inch per foot. If the pitch exceeds this limit, the Load Table does not apply. When top chords are pitched, the load-carrying capacities are determined by the nominal depth of the joists at the center of the span. Sloped parallel-chord joists shall use span as defined by the length along the slope.

Where the joist span is in the **RED** **SHADED** area of the Load Table, the row of bridging nearest the mid span shall be diagonal bridging with bolted connections at chords and intersections. Hoisting cables shall not be released until this row of bolted diagonal bridging is completely installed. The **RED** **SHADED** area extends up through 60'–0".

Where the joist span is in the **BLUE** **SHADED** area of the Load Table, all rows of bridging shall be diagonal bridging with bolted connections at chords and intersections. Hoisting cables shall not be released until the two rows of bridging nearest the third points are completely installed. The **BLUE** **SHADED** area starts after 60'–0" and extends up through 100'–0".

The approximate gross moment of inertia (not adjusted for shear deformation), in inches^4, of a standard joist listed in the Load Table may be determined as follows:

$I_j = 26.767(W)(L^3)(10^{-6})$, where W= **RED** figure in the Load Table, and
L = (span – 0.33) in feet.

Loads for span increments not explicitly given in the Load Table may be determined using linear interpolation between the load values given in adjacent span columns.

*The safe uniform load for the spans shown in the SAFE LOAD Column is equal to (SAFE LOAD) / (span). The TOTAL safe uniformly distributed load-carrying capacity, for spans less than those shown in the SAFE LOAD Column are given in the MAX LOAD Column.

To solve for a RED figure for spans shown in the SAFE LOAD Column (or lesser spans), multiply the RED figure of the shortest span shown in the Load Table by (the shortest span shown in the Load Table – 0.33 feet)^2 and divide by (the actual span – 0.33 feet)^2. In no case shall the calculated load exceed the TOTAL load-carrying capacity of the joist.

ASD

STANDARD LOAD TABLE FOR LONGSPAN STEEL JOISTS, LH-SERIES
Based on a 50 ksi Maximum Yield Strength - Loads Shown In Pounds Per Linear Foot (plf)

Joist Designation	Approx. Wt in Lbs. Per Linear Ft. (Joists only)	Depth in inches	Max Load (plf)	SAFE LOAD* in Lbs. Between	SPAN IN FEET															
			< 22	**22-25**	**26**	**27**	**28**	**29**	**30**	**31**	**32**	**33**	**34**	**35**	**36**					
18LH02	10	18	553	12160	468	442	418	391	367	345	324	306	289	273	259					
					313	284	259	234	212	193	175	160	147	135	124					
18LH03	11	18	613	13480	521	493	467	438	409	382	359	337	317	299	283					
					348	317	289	262	236	213	194	177	161	148	136					
18LH04	12	18	714	15700	604	571	535	500	469	440	413	388	365	344	325					
					403	367	329	296	266	242	219	200	182	167	153					
18LH05	15	18	806	17740	684	648	614	581	543	508	476	448	421	397	375					
					454	414	378	345	311	282	256	233	212	195	179					
18LH06	15	18	954	20980	809	749	696	648	605	566	531	499	470	443	418					
					526	469	419	377	340	307	280	254	232	212	195					
18LH07	17	18	990	21780	840	809	780	726	678	635	595	559	526	496	469					
					553	513	476	428	386	349	317	288	264	241	222					
18LH08	19	18	1032	22700	876	843	812	784	758	717	680	641	604	571	540					
					577	534	496	462	427	387	351	320	292	267	246					
18LH09	21	18	1105	24320	936	901	868	838	810	783	759	713	671	633	598					
					616	571	527	491	458	418	380	346	316	289	266					
			< 23	**23-25**	**26**	**27**	**28**	**29**	**30**	**31**	**32**	**33**	**34**	**35**	**36**	**37**	**38**	**39**	**40**	
20LH02	10	20	498	11460	442	437	431	410	388	365	344	325	307	291	275	262	249	237	225	
					306	303	298	274	250	228	208	190	174	160	147	136	126	117	108	
20LH03	11	20	529	12160	469	463	458	452	434	414	395	372	352	333	316	299	283	269	255	
					337	333	317	302	280	258	238	218	200	184	169	156	143	133	123	
20LH04	12	20	648	14900	574	566	558	528	496	467	440	416	393	372	353	335	318	303	289	
					428	406	386	352	320	291	265	243	223	205	189	174	161	149	139	
20LH05	14	20	697	16020	616	609	602	595	571	544	513	484	458	434	411	390	371	353	336	
					459	437	416	395	366	337	308	281	258	238	219	202	187	173	161	
20LH06	15	20	930	21380	822	791	763	723	679	635	596	560	527	497	469	444	421	399	379	
					606	561	521	477	427	386	351	320	292	267	246	226	209	192	178	
20LH07	17	20	991	22800	878	845	814	786	760	711	667	627	590	556	526	497	471	447	425	
					647	599	556	518	484	438	398	362	331	303	278	256	236	218	202	
20LH08	19	20	1023	23520	908	873	842	813	785	760	722	687	654	621	588	558	530	503	479	
					669	619	575	536	500	468	428	395	365	336	309	285	262	242	225	
20LH09	21	20	1119	25740	990	953	918	886	856	828	802	778	755	712	673	636	603	572	544	
					729	675	626	581	542	507	475	437	399	366	336	309	285	264	244	
20LH10	23	20	1207	27760	1068	1028	991	956	924	894	865	839	814	791	748	707	670	636	604	
					786	724	673	626	585	545	510	479	448	411	377	346	320	296	274	

ASD

STANDARD LOAD TABLE FOR LONGSPAN STEEL JOISTS, LH-SERIES
Based on a 50 ksi Maximum Yield Strength - Loads Shown In Pounds Per Linear Foot (plf)

Joist Designation	Approx. Wt in Lbs. Per Linear Ft. (Joists only)	Depth in inches	Max Load (plf)	SAFELOAD* in Lbs. Between	SPAN IN FEET														
			< 29	29-33	34	35	36	37	38	39	40	41	42	43	44	45	46	47	48
24LH03	11	24	401	11620	342	339	336	323	307	293	279	267	255	244	234	224	215	207	199
					235	226	218	204	188	175	162	152	141	132	124	116	109	102	96
24LH04	12	24	491	14240	419	398	379	360	343	327	312	298	285	273	262	251	241	231	222
					288	265	246	227	210	195	182	169	158	148	138	130	122	114	107
24LH05	13	24	526	15260	449	446	440	419	399	380	363	347	331	317	304	291	280	269	258
					308	297	285	264	244	226	210	196	182	171	160	150	141	132	124
24LH06	16	24	708	20520	604	579	555	530	504	480	457	437	417	399	381	364	348	334	320
					411	382	356	331	306	284	263	245	228	211	197	184	172	161	152
24LH07	17	24	777	22540	665	638	613	588	565	541	516	491	468	446	426	407	389	373	357
					452	421	393	367	343	320	297	276	257	239	223	208	195	182	171
24LH08	18	24	829	24040	707	677	649	622	597	572	545	520	497	475	455	435	417	400	384
					480	447	416	388	362	338	314	292	272	254	238	222	208	196	184
24LH09	21	24	976	28300	832	808	785	764	731	696	663	632	602	574	548	524	501	480	460
					562	530	501	460	424	393	363	337	313	292	272	254	238	223	209
24LH10	23	24	1031	29900	882	856	832	809	788	768	737	702	668	637	608	582	556	533	511
					596	559	528	500	474	439	406	378	351	326	304	285	266	249	234
24LH11	25	24	1087	31520	927	900	875	851	829	807	787	768	734	701	671	642	616	590	567
					624	588	555	525	498	472	449	418	388	361	337	315	294	276	259
			< 34	34-41	42	43	44	45	46	47	48	49	50	51	52	53	54	55	56
28LH05	13	28	415	14120	337	323	310	297	286	275	265	255	245	237	228	220	213	206	199
					219	205	192	180	169	159	150	142	133	126	119	113	107	102	97
28LH06	16	28	552	18760	448	429	412	395	379	364	350	337	324	313	301	291	281	271	262
					289	270	253	238	223	209	197	186	175	166	156	148	140	133	126
28LH07	17	28	623	21180	505	484	464	445	427	410	394	379	365	352	339	327	316	305	295
					326	305	285	267	251	236	222	209	197	186	176	166	158	150	142
28LH08	18	28	667	22680	540	517	496	475	456	438	420	403	387	371	357	344	331	319	308
					348	325	305	285	268	252	236	222	209	196	185	175	165	156	148
28LH09	21	28	821	27920	667	639	612	586	563	540	519	499	481	463	446	430	415	401	387
					428	400	375	351	329	309	291	274	258	243	228	216	204	193	183
28LH10	23	28	898	30540	729	704	679	651	625	600	576	554	533	513	495	477	460	444	429
					466	439	414	388	364	342	322	303	285	269	255	241	228	215	204
28LH11	25	28	964	32760	780	762	736	711	682	655	629	605	582	561	540	521	502	485	468
					498	475	448	423	397	373	351	331	312	294	278	263	249	236	223
28LH12	27	28	1058	35980	857	837	818	800	782	766	737	709	682	656	632	609	587	566	546
					545	520	496	476	454	435	408	383	361	340	321	303	285	270	256
28LH13	30	28	1103	37500	895	874	854	835	816	799	782	766	751	722	694	668	643	620	598
					569	543	518	495	472	452	433	415	396	373	352	332	314	297	281
			< 39	39-46 47-49	50	51	52	53	54	55	56	57	58	59	60	61	62	63	64
32LH06	14	32	431	16820 16820	338	326	315	304	294	284	275	266	257	249	242	234	227	220	214
					211	199	189	179	169	161	153	145	138	131	125	119	114	108	104
32LH07	16	32	485	18920 18920	379	366	353	341	329	318	308	298	288	279	271	262	254	247	240
					235	223	211	200	189	179	170	162	154	146	140	133	127	121	116
32LH08	17	32	527	20540 20540	411	397	383	369	357	345	333	322	312	302	293	284	275	267	259
					255	242	229	216	205	194	184	175	167	159	151	144	137	131	125
32LH09	21	32	661	25780 25780	516	498	480	463	447	432	418	404	391	379	367	356	345	335	325
					319	302	285	270	256	243	230	219	208	198	189	180	172	164	157
32LH10	21	32	731	28500 28500	571	550	531	512	495	478	462	445	430	416	402	389	376	364	353
					352	332	315	297	282	267	254	240	228	217	206	196	186	178	169
32LH11	24	32	801	31220 31220	625	602	580	560	541	522	505	488	473	458	443	429	416	403	390
					385	363	343	325	308	292	277	263	251	239	227	216	206	196	187
32LH12	27	32	939	36640 36640	734	712	688	664	641	619	598	578	559	541	524	508	492	477	463
					450	428	406	384	364	345	327	311	295	281	267	255	243	232	221
32LH13	30	32	1048	40880 40880	817	801	785	771	742	715	690	666	643	621	600	581	562	544	527
					500	480	461	444	420	397	376	354	336	319	304	288	275	262	249
32LH14	33	32	1079	42080 42080	843	826	810	795	780	766	738	713	688	665	643	622	602	583	564
					515	495	476	458	440	417	395	374	355	337	321	304	290	276	264
32LH15	35	32	1115	43500 43500	870	853	837	821	805	791	776	763	750	725	701	678	656	635	616
					532	511	492	473	454	438	422	407	393	374	355	338	322	306	292
			< 43	43-46 47-56 57	58	59	60	61	62	63	64	65	66	67	68	69	70	71	72
36LH07	16	36	393	16900 16900	292	283	274	266	258	251	244	237	230	224	218	212	207	201	196
					177	168	160	153	146	140	134	128	122	117	112	107	103	99	95
36LH08	18	36	433	18600 18600	321	311	302	293	284	276	268	260	253	246	239	233	227	221	215
					194	185	176	168	160	153	146	140	134	128	123	118	113	109	104
36LH09	21	36	554	23840 23840	411	398	386	374	363	352	342	333	323	314	306	297	289	282	275
					247	235	224	214	204	195	186	179	171	163	157	150	144	138	133
36LH10	21	36	611	26260 26260	454	440	426	413	401	389	378	367	357	347	338	328	320	311	303
					273	260	248	236	225	215	206	197	188	180	173	165	159	152	146
36LH11	23	36	667	28660 28660	495	480	465	451	438	425	412	401	389	378	368	358	348	339	330
					297	283	269	257	246	234	224	214	205	196	188	180	173	166	159
36LH12	25	36	798	34300 34300	593	575	557	540	523	508	493	478	464	450	437	424	412	400	389
					354	338	322	307	292	279	267	255	243	232	222	213	204	195	187
36LH13	30	36	938	40340 40340	697	675	654	634	615	596	579	562	546	531	516	502	488	475	463
					415	395	376	359	342	327	312	298	285	273	262	251	240	231	222
36LH14	36	36	1034	44460 44460	768	755	729	706	683	661	641	621	602	584	567	551	535	520	505
					456	434	412	392	373	356	339	323	309	295	283	270	259	247	237
36LH15	36	36	1090	46880 46880	809	795	781	769	744	721	698	677	656	637	618	600	583	567	551
					480	464	448	434	413	394	375	358	342	327	312	299	286	274	263

ASD

STANDARD LOAD TABLE FOR LONGSPAN STEEL JOISTS, LH-SERIES
Based on a 50 ksi Maximum Yield Strength - Loads Shown In Pounds Per Linear Foot (plf)

Joist Designation	Approx. Wt in Lbs. Per Linear Ft. (Joists Only)	Depth in inches	Max Load (plf)	SAFELOAD* in Lbs. Between		SPAN IN FEET														
			< 48	48-59	60-65	66	67	68	69	70	71	72	73	74	75	76	77	78	79	80
40LH08	16	40	348	16680	16680	254	247	241	234	228	222	217	211	206	201	196	192	187	183	178
						150	144	138	132	127	122	117	112	108	104	100	97	93	90	86
40LH09	21	40	457	21920	21920	332	323	315	306	298	291	283	276	269	263	256	250	244	239	233
						196	188	180	173	166	160	153	147	141	136	131	126	122	118	113
40LH10	21	40	503	24120	24120	367	357	347	338	329	321	313	305	297	290	283	276	269	262	255
						216	207	198	190	183	176	169	162	156	150	144	139	134	129	124
40LH11	22	40	549	26340	26340	399	388	378	368	358	349	340	332	323	315	308	300	293	286	279
						234	224	215	207	198	190	183	176	169	163	157	151	145	140	135
40LH12	25	40	668	32060	32060	486	472	459	447	435	424	413	402	392	382	373	364	355	346	338
						285	273	261	251	241	231	222	213	205	197	189	182	176	169	163
40LH13	30	40	788	37800	37800	573	557	542	528	514	500	487	475	463	451	440	429	419	409	399
						334	320	307	295	283	271	260	250	241	231	223	214	207	199	192
40LH14	35	40	900	43220	43220	656	638	620	603	587	571	556	542	528	515	502	490	478	466	455
						383	367	351	336	323	309	297	285	273	263	252	243	233	225	216
40LH15	36	40	1007	48340	48340	734	712	691	671	652	633	616	599	583	567	552	538	524	511	498
						427	408	390	373	357	342	328	315	302	290	279	268	258	248	239
40LH16	42	40	1110	53280	53280	808	796	784	772	761	751	730	710	691	673	655	638	622	606	591
						469	455	441	428	416	404	387	371	356	342	329	316	304	292	282
			< 53	**53-59**	**60-73**	**74**	**75**	**76**	**77**	**78**	**79**	**80**	**81**	**82**	**83**	**84**	**85**	**86**	**87**	**88**
44LH09	19	44	379	20100	20100	272	265	259	253	247	242	236	231	226	221	216	211	207	202	198
						158	152	146	141	136	131	127	122	118	114	110	106	103	99	96
44LH10	21	44	419	22200	22200	300	293	286	279	272	266	260	254	249	243	238	233	228	223	218
						174	168	162	155	150	144	139	134	130	125	121	117	113	110	106
44LH11	22	44	453	24000	24000	325	317	310	302	295	289	282	276	269	264	258	252	247	242	236
						188	181	175	168	162	157	151	146	140	136	131	127	123	119	115
44LH12	25	44	561	29740	29740	402	393	383	374	365	356	347	339	331	323	315	308	300	293	287
						232	224	215	207	200	192	185	179	172	166	160	155	149	144	139
44LH13	30	44	665	35260	35260	477	466	454	444	433	423	413	404	395	386	377	369	361	353	346
						275	265	254	246	236	228	220	212	205	198	191	185	179	173	167
44LH14	31	44	766	40580	40580	549	534	520	506	493	481	469	457	446	436	425	415	406	396	387
						315	302	291	279	268	259	249	240	231	223	215	207	200	193	187
44LH15	36	44	891	47220	47220	639	623	608	593	579	565	551	537	524	512	500	488	476	466	455
						366	352	339	326	314	303	292	281	271	261	252	243	234	227	219
44LH16	42	44	1027	54440	54440	737	719	701	684	668	652	637	622	608	594	580	568	555	543	531
						421	405	390	375	362	348	336	324	313	302	291	282	272	263	255
44LH17	47	44	1103	58460	58460	790	780	769	759	750	732	715	699	683	667	652	638	624	610	597
						450	438	426	415	405	390	376	363	351	338	327	316	305	295	285
			< 57	**57-59**	**60-81**	**82**	**83**	**84**	**85**	**86**	**87**	**88**	**89**	**90**	**91**	**92**	**93**	**94**	**95**	**96**
48LH10	21	48	352	20080	20080	246	241	236	231	226	221	217	212	208	204	200	196	192	188	185
						141	136	132	127	123	119	116	112	108	105	102	99	96	93	90
48LH11	22	48	382	21780	21780	266	260	255	249	244	239	234	229	225	220	216	212	208	204	200
						152	147	142	137	133	129	125	120	117	113	110	106	103	100	97
48LH12	25	48	482	27500	27500	336	329	322	315	308	301	295	289	283	277	272	266	261	256	251
						191	185	179	173	167	161	156	151	147	142	138	133	129	126	122
48LH13	29	48	578	32940	32940	402	393	384	376	368	360	353	345	338	332	325	318	312	306	300
						228	221	213	206	199	193	187	180	175	170	164	159	154	150	145
48LH14	32	48	682	38860	38860	475	464	454	444	434	425	416	407	399	390	383	375	367	360	353
						269	260	251	243	234	227	220	212	206	199	193	187	181	176	171
48LH15	36	48	784	44680	44680	545	533	521	510	499	488	478	468	458	448	439	430	422	413	405
						308	298	287	278	269	260	252	244	236	228	221	214	208	201	195
48LH16	42	48	904	51500	51500	629	615	601	588	576	563	551	540	528	518	507	497	487	477	468
						355	343	331	320	310	299	289	280	271	263	255	247	239	232	225
48LH17	47	48	1015	57840	57840	706	690	675	660	646	632	619	606	593	581	569	558	547	536	525
						397	383	371	358	346	335	324	314	304	294	285	276	268	260	252

American National Standard SJI-LH/DLH-2010

STANDARD LRFD LOAD TABLE

DEEP LONGSPAN STEEL JOISTS, DLH-SERIES

Based on a 50 ksi Maximum Yield Strength
Spans up to and including 144 ft. adopted by the Steel Joist Institute May 1, 2000
Spans greater than 144 ft. up to and including 240 ft. adopted by the Steel Joist Institute May 18, 2010
Revised to May 18, 2010 – Effective December, 31, 2010

The **BLACK** figures in the Load Table give the TOTAL safe factored uniformly distributed load-carrying capacities, in pounds per linear foot, of **LRFD DLH-**Series Steel Joists.

The approximate joist weights, in pounds per linear foot, given in the Load Table may be added to the other building weights to determine the unfactored DEAD load. In all cases the factored DEAD load, including the joist self-weight, must be deducted from the TOTAL load to determine the factored LIVE load. The approximate joist weights do not include accessories.

The **RED** figures in the Load Table represent the unfactored, uniform load, in pounds per linear foot, which will produce an approximate joist deflection of 1/360 of the span. This load can be linearly prorated to obtain the unfactored, uniform load for supplementary deflection criteria (i.e. the unfactored uniform load which will produce a joist deflection of 1/240 of the span may be obtained by multiplying the **RED** figures by 360/240). In no case shall the prorated, unfactored load exceed the unfactored TOTAL load-carrying capacity of the joist as given in the Standard **ASD** Load Table for Deep Longspan Steel Joists, **DLH**-Series.

The Load Table applies to joists with either parallel chords or pitched top chords. Joists can have a top chord pitch up to 1/2 inch per foot. If the pitch exceeds this limit, the Load Table does not apply. When top chords are pitched, the load-carrying capacities are determined by the nominal depth of the joists at the center of the span. Sloped parallel-chord joists shall use span as defined by the length along the slope.

Where the joist span is in the **BLUE SHADED** area of the Load Table, all rows of bridging shall be diagonal bridging with bolted connections at chords and intersections. Hoisting cables shall not be released until the two rows of bridging nearest the third points are completely installed. The **BLUE SHADED** area starts after 60'–0" and extends up through 100'–0".
Where the joist span is in the **GRAY SHADED** area of the Load Table, all rows of bridging shall be diagonal bridging with bolted connections at chords and intersections. Hoisting cables shall not be released until all rows of bridging are completely installed. The **GRAY SHADED** area starts after 100'–0" and extends up through 240'–0".

The approximate gross moment of inertia (not adjusted for shear deformation), in inches^4, of a standard joist listed in the Load Table may be determined as follows:

$I_j = 26.767(W)(L^3)(10^{-6})$, where W= **RED** figure in the Load Table, and
L = (span - 0.33) in feet.

Loads for span increments not explicitly given in the Load Table may be determined using linear interpolation between the load values given in adjacent span columns.

*The safe factored uniform load for the spans shown in the SAFE LOAD Column is equal to (SAFE LOAD) / (span). The TOTAL safe factored uniformly distributed load-carrying capacity, for spans less than those shown in the SAFE LOAD Column are given in the MAX LOAD Column.

To solve for an unfactored **RED** figure for spans shown in the SAFE LOAD Column (or lesser spans), multiply the unfactored **RED** figure of the shortest span shown in the Load Table by (the shortest span shown in the Load Table - 0.33 feet)^2 and divide by (the actual span - 0.33 feet)^2 . In no case shall the calculated unfactored load exceed the unfactored TOTAL load-carrying capacity of the joist as determined from the Standard **ASD** Load Table for Deep Longspan Steel Joists, **DLH**-Series.

LRFD

STANDARD LOAD TABLE LONGSPAN STEEL JOISTS, DLH-SERIES

Based on a 50 ksi Maximum Yield Strength - Loads Shown in Pounds per Linear Foot (plf)

Joist Designation	Approx. Wt in Lbs. Per Linear Ft (Joists only)	Depth in inches	Max Load plf	SAFE LOAD* in Lbs. Between		SPAN IN FEET														
			< 62	62-89		90	91	92	93	94	95	96	97	98	99	100	101	102	103	104
52DLH10	25	52	648	40200		447	436	427	418	409	400	391	384	376	369	361	354	346	340	334
						171	165	159	154	150	145	140	136	132	128	124	120	116	114	110
52DLH11	26	52	712	44130		490	480	469	459	448	439	430	421	412	405	396	388	381	373	366
						187	181	174	169	164	158	153	149	144	140	135	132	128	124	120
52DLH12	29	52	794	49230		547	535	523	513	501	490	480	471	460	451	442	433	426	417	409
						204	197	191	185	179	173	168	163	158	153	149	144	140	135	132
52DLH13	34	52	964	59760		664	649	636	621	609	595	583	571	559	549	537	526	516	507	496
						247	239	231	224	216	209	203	197	191	185	180	174	170	164	159
52DLH14	39	52	1103	68370		760	745	729	714	699	685	670	657	645	631	619	607	595	585	573
						276	266	258	249	242	234	227	220	213	207	201	194	189	184	178
52DLH15	42	52	1239	76800		853	835	817	799	783	766	750	735	720	705	691	676	664	651	639
						311	301	291	282	272	264	256	247	240	233	226	219	213	207	201
52DLH16	45	52	1335	82800		921	901	882	862	844	826	810	792	777	760	745	730	717	702	688
						346	335	324	314	304	294	285	276	267	260	252	245	237	230	224
52DLH17	52	52	1537	95310		1059	1036	1014	991	970	951	930	912	892	874	858	840	823	808	792
						395	381	369	357	346	335	324	315	304	296	286	279	270	263	255
			<67	67-97		98	99	100	101	102	103	104	105	106	107	108	109	110	111	112
56DLH11	26	56	631	42300		432	424	415	408	400	393	385	379	372	366	358	352	346	340	334
						169	163	158	153	149	145	140	136	133	129	125	122	118	115	113
56DLH12	30	56	725	48600		496	486	477	468	459	450	442	433	426	417	409	402	394	388	381
						184	178	173	168	163	158	153	150	145	141	137	133	130	126	123
56DLH13	34	56	879	58860		601	591	579	568	558	547	537	526	516	507	496	487	478	471	462
						223	216	209	204	197	191	186	181	175	171	166	161	157	152	149
56DLH14	39	56	993	66540		679	666	652	640	628	616	604	594	582	571	562	552	541	532	523
						249	242	234	228	221	214	209	202	196	190	186	181	175	171	167
56DLH15	42	56	1135	76020		777	762	747	732	717	703	690	676	664	651	639	628	616	604	594
						281	272	264	256	248	242	234	228	221	215	209	204	198	192	188
56DLH16	46	56	1224	82020		838	822	805	789	774	759	744	730	717	703	690	678	666	654	642
						313	304	294	285	277	269	262	254	247	240	233	227	221	214	209
56DLH17	51	56	1411	94530		964	945	927	907	891	873	856	840	823	808	793	780	765	751	738
						356	345	335	325	316	306	298	289	281	273	266	258	251	245	238
			< 71	71-99	100-105	106	107	108	109	110	111	112	113	114	115	116	117	118	119	120
60DLH12	29	60	659	46800	46800	442	433	426	418	411	405	397	391	384	378	372	366	360	354	348
						168	163	158	154	150	146	142	138	134	131	128	124	121	118	115
60DLH13	35	60	801	56880	56880	537	526	517	508	499	490	483	474	466	459	451	444	436	429	423
						203	197	191	187	181	176	171	167	163	158	154	151	147	143	139
60DLH14	40	60	890	63210	63210	597	586	574	564	555	544	534	525	516	507	498	490	481	474	465
						216	210	205	199	193	189	183	178	173	170	165	161	156	152	149
60DLH15	43	60	1045	74190	74190	700	687	675	663	651	640	628	618	607	597	588	577	568	559	550
						255	248	242	235	228	223	216	210	205	200	194	190	185	180	175
60DLH16	46	60	1149	81570	81570	769	756	741	727	714	702	690	676	666	654	642	631	621	610	600
						285	277	269	262	255	247	241	235	228	223	217	211	206	201	196
60DLH17	52	60	1320	93750	93750	885	868	853	837	822	807	793	778	765	751	739	726	714	702	690
						324	315	306	298	290	283	275	267	261	254	247	241	235	228	223
60DLH18	59	60	1524	108180	108180	1021	1002	984	966	948	931	915	898	883	867	852	838	823	810	796
						366	357	346	337	327	319	310	303	294	286	279	272	266	259	252
			<76	76-99	100-113	114	115	116	117	118	119	120	121	122	123	124	125	126	127	128
64DLH12	31	64	594	45120	45120	396	388	382	376	370	364	358	352	346	342	336	331	327	321	316
						153	150	146	142	138	135	132	129	125	122	119	116	114	111	109
64DLH13	34	64	720	54750	54750	481	472	465	457	450	442	436	429	421	415	409	403	396	390	385
						186	181	176	171	168	163	159	155	152	148	144	141	137	134	131
64DLH14	40	64	825	62730	62730	550	540	531	523	514	505	498	489	481	474	466	459	451	444	438
						199	193	189	184	179	174	171	166	162	158	154	151	147	143	140
64DLH15	43	64	946	71910	71910	631	621	610	600	591	580	571	562	553	544	537	528	520	511	504
						234	228	223	217	211	206	201	196	191	187	182	177	173	170	165
64DLH16	46	64	1065	80940	80940	711	699	687	675	664	652	642	631	621	610	601	591	582	573	564
						262	254	248	242	235	229	224	218	213	208	203	198	193	189	184
64DLH17	52	64	1227	93270	93270	819	804	790	777	763	751	738	726	714	702	691	681	669	658	648
						298	290	283	275	268	262	255	248	243	237	231	226	220	215	210
64DLH18	59	64	1417	107700	107700	945	928	912	897	880	867	852	838	823	810	798	784	772	760	748
						337	328	320	311	304	296	288	282	274	267	261	255	249	243	237
			< 81	81-99	100-121	122	123	124	125	126	127	128	129	130	131	132	133	134	135	136
68DLH13	37	68	650	52650	52650	432	426	418	412	406	400	394	388	382	378	372	366	361	355	351
						171	168	164	159	155	152	149	145	142	138	135	133	130	127	124
68DLH14	40	68	749	60630	60630	498	490	483	475	468	462	454	448	441	435	429	421	415	409	403
						184	179	175	171	167	163	159	155	152	148	145	141	138	135	133
68DLH15	44	68	839	67980	67980	558	547	540	531	522	514	505	498	490	483	475	468	462	454	448
						206	201	196	191	187	182	178	174	170	166	162	158	155	152	148
68DLH16	49	68	995	80610	80610	661	649	640	630	619	610	600	591	582	573	564	556	547	540	531
						242	236	230	225	219	214	209	204	199	195	190	186	182	178	174
68DLH17	55	68	1121	90840	90840	745	733	721	711	700	690	679	669	658	649	640	630	621	612	604
						275	268	262	256	249	244	238	232	228	222	217	212	208	203	198
68DLH18	61	68	1298	105150	105150	862	849	835	823	810	798	786	774	762	751	739	729	718	708	697
						311	304	297	289	283	276	269	263	257	251	246	240	234	230	225
68DLH19	67	68	1495	121080	121080	993	976	961	946	931	916	901	888	874	861	847	835	822	810	798
						353	344	336	328	320	313	305	298	291	285	278	272	266	260	254
			< 85	85-99	100-129	130	131	132	133	134	135	136	137	138	139	140	141	142	143	144
72DLH14	41	72	694	58950	58950	454	447	441	435	427	421	415	411	405	399	393	388	382	378	372
						171	167	163	159	155	152	149	146	143	139	136	133	131	128	125
72DLH15	44	72	794	67530	67530	520	513	504	496	489	483	475	468	462	454	448	442	436	429	423
						191	187	183	178	174	171	167	163	160	156	152	150	147	143	140
72DLH16	50	72	918	78060	78060	601	592	585	576	567	559	552	544	537	529	522	514	507	501	493
						225	219	214	209	205	200	196	191	188	183	179	175	171	169	165
72DLH17	56	72	1033	87810	87810	676	667	657	648	639	630	621	612	603	595	586	579	571	564	556
						256	250	245	239	233	228	224	218	213	209	205	200	196	191	188
72DLH18	59	72	1210	102870	102870	792	780	768	757	745	735	724	718	705	694	685	675	666	657	648
						289	283	276	270	265	258	252	247	242	236	231	227	222	217	212
72DLH19	70	72	1419	120600	120600	928	913	900	886	873	859	847	835	823	811	799	789	777	766	756
						328	321	313	306	300	293	286	280	274	268	263	257	251	247	241

STANDARD LOAD TABLE LONGSPAN STEEL JOISTS, LRFD DLH-SERIES

Based on a 50 ksi Maximum Yield Strength - Loads Shown in Pounds per Linear Foot (plf)

Joist Designation	Approx. Wt in Lbs. Per Linear Ft (Joists only)	Depth in inches	Max Load (plf)	SAFE LOAD* in Lbs. Between		SPAN IN FEET															
			< 81	**81-99**	**100-111**	**112**	**115**	**118**	**121**	**124**	**127**	**130**	**133**	**136**	**139**	**142**	**145**	**148**	**151**	**155**	**160**
80DLH15	40	80	966	78240	78240	699	663	632	602	575	549	525	503	482	461	443	425	408	392	371	347
						321	296	275	255	236	220	205	192	179	167	157	147	139	130	120	109
80DLH16	46	80	1161	94020	94020	840	802	763	727	691	658	628	600	574	549	525	504	483	463	439	411
						375	347	321	297	276	257	240	224	209	196	184	172	162	152	141	128
80DLH17	53	80	1341	108630	108630	971	926	881	839	800	765	731	699	669	641	615	590	567	545	517	485
						451	416	386	358	332	309	288	269	252	235	221	207	195	183	169	154
80DLH18	60	80	1518	122760	122760	1097	1044	993	947	903	863	825	789	756	723	695	666	641	615	584	548
						516	477	441	409	380	354	330	308	288	270	253	237	223	210	194	176
80DLH19	67	80	1768	143220	143220	1280	1218	1160	1104	1052	1005	960	918	878	840	806	774	743	714	677	635
						578	533	493	458	425	396	369	344	322	301	283	266	250	235	217	197
80DLH20	75	80	1987	160980	160980	1446	1382	1323	1268	1211	1157	1104	1056	1011	968	927	891	855	821	780	731
						646	596	552	512	475	443	412	385	360	337	316	297	279	263	243	220
			< 89	**89-99**	**100-120**	**121**	**124**	**127**	**130**	**133**	**136**	**139**	**142**	**145**	**148**	**151**	**155**	**160**	**165**	**170**	**175**
88DLH16	46	88	1048	93270	93270	771	735	701	671	642	615	591	567	545	524	503	477	448	422	398	376
						361	336	313	291	272	254	238	223	210	197	186	172	156	143	130	119
88DLH17	51	88	1185	105450	105450	871	830	789	753	719	687	659	630	605	579	557	528	495	465	437	412
						404	375	349	325	304	284	266	249	234	220	207	191	173	159	146	133
88DLH18	58	88	1359	120930	120930	1001	953	908	866	827	791	756	725	695	666	639	607	569	535	503	474
						460	427	397	370	346	323	303	284	267	250	236	218	199	181	165	152
88DLH19	65	88	1572	139890	139890	1157	1101	1049	999	954	912	873	836	801	770	738	701	657	617	580	547
						521	484	450	420	392	367	343	322	302	284	267	248	225	205	187	172
88DLH20	76	88	1808	160950	160950	1334	1281	1232	1184	1133	1085	1041	998	959	921	885	841	790	743	700	660
						623	579	539	502	469	438	410	385	361	340	320	296	269	246	224	206
88DLH21	89	88	2231	198540	198540	1649	1568	1494	1425	1361	1301	1244	1191	1143	1097	1053	999	936	880	827	779
						724	673	626	584	545	509	477	447	420	395	372	344	313	285	261	239
			< 97	**97-99**	**100-129**	**130**	**133**	**136**	**139**	**142**	**145**	**148**	**151**	**155**	**160**	**165**	**170**	**175**	**180**	**185**	**190**
96DLH17	52	96	1085	105270	105270	810	776	744	711	684	657	632	608	578	542	509	480	452	427	404	382
						389	363	339	318	298	280	263	247	229	208	190	173	159	146	134	124
96DLH18	58	96	1222	118500	118500	912	875	839	803	770	740	713	686	653	615	579	546	516	488	463	438
						443	413	386	362	340	319	300	282	261	237	216	198	181	166	153	141
96DLH19	66	96	1460	141660	141660	1091	1046	1001	957	917	878	842	809	768	720	676	636	601	566	536	507
						502	469	438	410	385	361	340	320	296	269	246	224	206	189	174	161
96DLH20	74	96	1644	159420	159420	1236	1184	1131	1083	1037	993	952	915	868	815	766	721	680	642	607	574
						569	531	496	465	436	409	385	362	336	305	277	254	233	214	196	181
96DLH21	90	96	2062	200010	200010	1541	1473	1410	1350	1296	1243	1196	1149	1093	1026	965	908	856	809	765	724
						698	652	610	571	535	503	473	445	412	374	341	312	286	263	242	224
96DLH22	102	96	2310	224070	224070	1725	1662	1601	1542	1487	1436	1382	1329	1264	1188	1118	1054	995	941	890	843
						811	757	708	663	622	584	549	517	479	435	396	362	332	305	281	259
			< 105	**105-138**		**139**	**142**	**145**	**148**	**151**	**155**	**160**	**165**	**170**	**175**	**180**	**185**	**190**	**195**	**200**	**205**
104DLH18	59	104	1100	115470		831	798	768	734	708	674	635	601	568	537	508	482	458	435	414	394
						426	400	375	353	332	307	279	255	233	213	195	180	167	154	142	132
104DLH19	67	104	1337	140430		1011	971	933	897	861	819	770	727	686	648	613	581	552	524	497	473
						484	453	426	401	377	349	317	289	265	242	222	204	189	175	162	150
104DLH20	75	104	1504	157890		1146	1107	1071	1032	992	944	886	833	784	739	698	660	626	593	563	535
						548	513	483	453	427	395	359	327	299	274	251	232	214	198	184	170
104DLH21	90	104	1890	198480		1434	1376	1322	1271	1220	1160	1091	1028	970	917	866	821	779	740	703	668
						673	632	593	558	525	486	442	403	368	337	307	284	263	244	226	209
104DLH22	104	104	2119	222540		1607	1551	1499	1449	1401	1340	1261	1189	1121	1059	1001	949	901	855	812	774
						783	734	689	648	610	564	513	468	428	392	359	331	306	283	262	244
104DLH23	109	104	2334	245100		1772	1712	1644	1578	1514	1437	1348	1267	1192	1125	1062	1004	952	902	857	814
						819	768	721	678	638	590	536	489	447	410	377	347	320	296	274	254
			< 113	**113-147**		**148**	**151**	**155**	**160**	**165**	**170**	**175**	**180**	**185**	**190**	**195**	**200**	**205**	**210**	**215**	**220**
112DLH19	67	112	1223	138150		935	900	857	805	759	716	677	643	610	579	549	523	498	476	454	433
						466	439	406	369	336	308	281	259	238	220	203	189	175	162	151	142
112DLH20	76	112	1384	156360		1065	1032	985	927	873	824	780	740	702	667	632	603	574	547	522	500
						528	497	459	418	381	348	319	293	270	249	231	213	198	184	171	160
112DLH21	91	112	1743	196950		1337	1287	1223	1150	1083	1022	966	915	867	823	782	744	709	676	645	616
						650	612	566	514	469	429	393	361	333	306	283	263	244	227	211	198
112DLH22	104	112	1956	221010		1499	1451	1392	1321	1250	1181	1117	1057	1002	952	904	860	820	782	745	712
						755	711	657	598	545	498	457	419	386	356	329	306	283	264	246	229
112DLH23	110	112	2155	243540		1653	1601	1535	1454	1369	1288	1214	1147	1086	1030	977	928	882	839	800	763
						790	744	688	625	571	522	478	439	404	373	345	320	297	276	257	239
112DLH24	131	112	2555	286660		1956	1895	1818	1727	1631	1539	1455	1379	1307	1241	1179	1123	1070	1019	972	928
						957	901	834	758	691	632	579	532	489	451	418	387	359	334	311	291
			< 121	**121-165**		**166**	**170**	**175**	**180**	**185**	**190**	**195**	**200**	**205**	**210**	**215**	**220**	**225**	**230**	**235**	**240**
120DLH20	77	120	1229	148650		896	856	808	766	726	691	658	627	598	570	544	521	498	477	457	439
						430	400	367	338	311	287	265	246	228	212	198	185	172	161	151	142
120DLH21	92	120	1528	184860		1122	1072	1012	959	908	864	821	782	745	710	678	648	620	593	569	545
						530	494	452	416	383	353	326	303	281	262	244	227	212	199	186	173
120DLH22	104	120	1751	211920		1283	1235	1169	1106	1049	997	949	903	860	821	783	749	716	686	657	629
						616	574	526	483	445	411	380	352	327	304	283	265	247	231	217	204
120DLH23	111	120	1938	234480		1415	1361	1287	1219	1157	1099	1046	995	948	903	862	822	786	751	719	689
						644	601	551	506	466	430	397	369	341	318	296	276	258	241	227	213
120DLH24	132	120	2298	278070		1676	1610	1522	1441	1367	1300	1237	1177	1122	1070	1022	977	934	894	857	821
						781	728	667	613	565	521	482	447	414	386	359	335	313	293	275	258
120DLH25	152	120	2633	318630		1926	1847	1748	1656	1571	1492	1418	1350	1287	1228	1173	1122	1073	1026	983	943
						915	853	782	718	661	610	564	523	485	452	421	393	367	344	322	302

American National Standard SJI-LH/DLH-2010

STANDARD ASD LOAD TABLE

DEEP LONGSPAN STEEL JOISTS, DLH-SERIES

Based on a 50 ksi Maximum Yield Strength
Spans up to and including 144 ft. adopted by the Steel Joist Institute May 25, 1983
Spans greater than 144 ft. up to and including 240 ft. adopted by the Steel Joist Institute May 18, 2010
Revised to May 18, 2010 – Effective December 31, 2010

The **BLACK** figures in the Load Table give the TOTAL safe uniformly distributed load-carrying capacities, in pounds per linear foot, of **ASD DLH-**Series Steel Joists.

The approximate joist weights, in pounds per linear foot, given in the Load Table may be added to the other building weights to determine the DEAD load. In all cases the DEAD load, including the joist self-weight, must be deducted from the TOTAL load to determine the LIVE load. The approximate joist weights do not include accessories.

The **RED** figures in the Load Table represent the uniform load, in pounds per linear foot, which will produce an approximate joist deflection of 1/360 of the span. This load can be linearly prorated to obtain the uniform load for supplementary deflection criteria (i.e. a uniform load which will produce a joist deflection of 1/240 of the span may be obtained by multiplying the **RED** figures by 360/240). In no case shall the prorated load exceed the TOTAL load-carrying capacity of the joist.

The Load Table applies to joists with either parallel chords or pitched top chords. Joists can have a top chord pitch up to 1/2 inch per foot. If the pitch exceeds this limit, the Load Table does not apply. When top chords are pitched, the load-carrying capacities are determined by the nominal depth of the joists at the center of the span. Sloped parallel-chord joists shall use span as defined by the length along the slope.

Where the joist span is in the **BLUE SHADED** area of the Load Table, all rows of bridging shall be diagonal bridging with bolted connections at chords and intersections. Hoisting cables shall not be released until the two rows of bridging nearest the third points are completely installed. The **BLUE SHADED** area starts after 60'–0" and extends up through 100'–0".

Where the joist span is in the **GRAY SHADED** area of the Load Table, all rows of bridging shall be diagonal bridging with bolted connections at chords and intersections. Hoisting cables shall not be released until all rows of bridging are completely installed. The **GRAY SHADED** area starts after 100'–0" and extends up through 240'–0".

The approximate gross moment of inertia (not adjusted for shear deformation), in inches^4, of a standard joist listed in the Load Table may be determined as follows:

$I_j = 26.767(W)(L^3)(10^{-6})$, where W= **RED** figure in the Load Table, and
L = (span - 0.33) in feet.

Loads for span increments not explicitly given in the Load Table may be determined using linear interpolation between the load values given in adjacent span columns.

*The safe uniform load for the spans shown in the SAFE LOAD Column is equal to (SAFE LOAD) / (span). The TOTAL safe uniformly distributed load-carrying capacity, for spans less than those shown in the SAFE LOAD Column are given in the MAX LOAD Column.

To solve for a **RED** figure for spans shown in the SAFE LOAD Column (or lesser spans), multiply the **RED** figure of the shortest span shown in the Load Table by (the shortest span shown in the Load Table - 0.33 feet)^2 and divide by (the actual span - 0.33 feet)^2. In no case shall the calculated load exceed the TOTAL load-carrying capacity of the joist.

ASD

STANDARD LOAD TABLE LONGSPAN STEEL JOISTS, DLH-SERIES

Based on a 50 ksi Maximum Yield Strength - Loads Shown in Pounds per Linear Foot (plf)

Joist Designation	Approx. Wt in Lbs. Per Linear Ft (Joists only)	Depth in inches	Max Load plf	SAFE LOAD* in Lbs. Between		SPAN IN FEET														
			< 62	62-89		90	91	92	93	94	95	96	97	98	99	100	101	102	103	104
52DLH10	25	52	432	26800		298	291	285	279	273	267	261	256	251	246	241	236	231	227	223
						171	165	159	154	150	145	140	136	132	128	124	120	116	114	110
52DLH11	26	52	475	29420		327	320	313	306	299	293	287	281	275	270	264	259	254	249	244
						187	181	174	169	164	158	153	149	144	140	135	132	128	124	120
52DLH12	29	52	529	32820		365	357	349	342	334	327	320	314	307	301	295	289	284	278	273
						204	197	191	185	179	173	168	163	158	153	149	144	140	135	132
52DLH13	34	52	643	39840		443	433	424	414	406	397	389	381	373	366	358	351	344	338	331
						247	239	231	224	216	209	203	197	191	185	180	174	170	164	159
52DLH14	39	52	735	45580		507	497	486	476	466	457	447	438	430	421	413	405	397	390	382
						276	266	258	249	242	234	227	220	213	207	201	194	189	184	178
52DLH15	42	52	826	51200		569	557	545	533	522	511	500	490	480	470	461	451	443	434	426
						311	301	291	282	272	264	256	247	240	233	226	219	213	207	201
52DLH16	45	52	890	55200		614	601	588	575	563	551	540	528	518	507	497	487	478	468	459
						346	335	324	314	304	294	285	276	267	260	252	245	237	230	224
52DLH17	52	52	1025	63540		706	691	676	661	647	634	620	608	595	583	572	560	549	539	528
						395	381	369	357	346	335	324	315	304	296	286	279	270	263	255
			<67	67-97		98	99	100	101	102	103	104	105	106	107	108	109	110	111	112
56DLH11	26	56	421	28200		288	283	277	272	267	262	257	253	248	244	239	235	231	227	223
						169	163	158	153	149	145	140	136	133	129	125	122	118	115	113
56DLH12	30	56	484	32400		331	324	318	312	306	300	295	289	284	278	273	268	263	259	254
						184	178	173	168	163	158	153	150	145	141	137	133	130	126	123
56DLH13	34	56	586	39240		401	394	386	379	372	365	358	351	344	338	331	325	319	314	308
						223	216	209	204	197	191	186	181	175	171	166	161	157	152	149
56DLH14	39	56	662	44360		453	444	435	427	419	411	403	396	388	381	375	368	361	355	349
						249	242	234	228	221	214	209	202	196	190	186	181	175	171	167
56DLH15	42	56	756	50680		518	508	498	488	478	469	460	451	443	434	426	419	411	403	396
						281	272	264	256	248	242	234	228	221	215	209	204	198	192	188
56DLH16	46	56	816	54680		559	548	537	526	516	506	496	487	478	469	460	452	444	436	428
						313	304	294	285	277	269	262	254	247	240	233	227	221	214	209
56DLH17	51	56	941	63020		643	630	618	605	594	582	571	560	549	539	529	520	510	501	492
						356	345	335	325	316	306	298	289	281	273	266	258	251	245	238
			< 71	71-99	100-105	106	107	108	109	110	111	112	113	114	115	116	117	118	119	120
60DLH12	29	60	439	31200	31200	295	289	284	279	274	270	265	261	256	252	248	244	240	236	232
						168	163	158	154	150	146	142	138	134	131	128	124	121	118	115
60DLH13	35	60	534	37920	37920	358	351	345	339	333	327	322	316	311	306	301	296	291	286	282
						203	197	191	187	181	176	171	167	163	158	154	151	147	143	139
60DLH14	40	60	594	42140	42140	398	391	383	376	370	363	356	350	344	338	332	327	321	316	310
						216	210	205	199	193	189	183	178	173	170	165	161	156	152	149
60DLH15	43	60	697	49460	49460	467	458	450	442	434	427	419	412	405	398	392	385	379	373	367
						255	248	242	235	228	223	216	210	205	200	194	190	185	180	175
60DLH16	46	60	766	54380	54380	513	504	494	485	476	468	460	451	444	436	428	421	414	407	400
						285	277	269	262	255	247	241	235	228	223	217	211	206	201	196
60DLH17	52	60	880	62500	62500	590	579	569	558	548	538	529	519	510	501	493	484	476	468	460
						324	315	306	298	290	283	275	267	261	254	247	241	235	228	223
60DLH18	59	60	1016	72120	72120	681	668	656	644	632	621	610	599	589	578	568	559	549	540	531
						366	357	346	337	327	319	310	303	294	286	279	272	266	259	252
			<76	76-99	100-113	114	115	116	117	118	119	120	121	122	123	124	125	126	127	128
64DLH12	31	64	396	30080	30080	264	259	255	251	247	243	239	235	231	228	224	221	218	214	211
						153	150	146	142	138	135	132	129	125	122	119	116	114	111	109
64DLH13	34	64	480	36500	36500	321	315	310	305	300	295	291	286	281	277	273	269	264	260	257
						186	181	176	171	168	163	159	155	152	148	144	141	137	134	131
64DLH14	40	64	550	41820	41820	367	360	354	349	343	337	332	326	321	316	311	306	301	296	292
						199	193	189	184	179	174	171	166	162	158	154	151	147	143	140
64DLH15	43	64	631	47940	47940	421	414	407	400	394	387	381	375	369	363	358	352	347	341	336
						234	228	223	217	211	206	201	196	191	187	182	177	173	170	165
64DLH16	46	64	710	53960	53960	474	466	458	450	443	435	428	421	414	407	401	394	388	382	376
						262	254	248	242	235	229	224	218	213	208	203	198	193	189	184
64DLH17	52	64	818	62180	62180	546	536	527	518	509	501	492	484	476	468	461	454	446	439	432
						298	290	283	275	268	262	255	248	243	237	231	226	220	215	210
64DLH18	59	64	945	71800	71800	630	619	608	598	587	578	568	559	549	540	532	523	515	507	499
						337	328	320	311	304	296	288	282	274	267	261	255	249	243	237
			< 81	81-99	100-121	122	123	124	125	126	127	128	129	130	131	132	133	134	135	136
68DLH13	37	68	433	35100	35100	288	284	279	275	271	267	263	259	255	252	248	244	241	237	234
						171	168	164	159	155	152	149	145	142	138	135	133	130	127	124
68DLH14	40	68	499	40420	40420	332	327	322	317	312	308	303	299	294	290	286	281	277	273	269
						184	179	175	171	167	163	159	155	152	148	145	141	138	135	133
68DLH15	44	68	560	45320	45320	372	365	360	354	348	343	337	332	327	322	317	312	308	303	299
						206	201	196	191	187	182	178	174	170	166	162	158	155	152	148
68DLH16	49	68	663	53740	53740	441	433	427	420	413	407	400	394	388	382	376	371	365	360	354
						242	236	230	225	219	214	209	204	199	195	190	186	182	178	174
68DLH17	55	68	748	60560	60560	497	489	481	474	467	460	453	446	439	433	427	420	414	408	403
						275	268	262	256	249	244	238	232	228	222	217	212	208	203	198
68DLH18	61	68	865	70100	70100	575	566	557	549	540	532	524	516	508	501	493	486	479	472	465
						311	304	297	289	283	276	269	263	257	251	246	240	234	230	225
68DLH19	67	68	997	80720	80720	662	651	641	631	621	611	601	592	583	574	565	557	548	540	532
						353	344	336	328	320	313	305	298	291	285	278	272	266	260	254
			< 85	85-99	100-129	130	131	132	133	134	135	136	137	138	139	140	141	142	143	144
72DLH14	41	72	462	39300	39300	303	298	294	290	285	281	277	274	270	266	262	259	255	252	248
						171	167	163	159	155	152	149	146	143	139	136	133	131	128	125
72DLH15	44	72	530	45020	45020	347	342	336	331	326	322	317	312	308	303	299	295	291	286	282
						191	187	183	178	174	171	167	163	160	156	152	150	147	143	140
72DLH16	50	72	612	52040	52040	401	395	390	384	378	373	368	363	358	353	348	343	338	334	329
						225	219	214	209	205	200	196	191	188	183	179	175	171	169	165
72DLH17	56	72	689	58540	58540	451	445	438	432	426	420	414	408	402	397	391	386	381	376	371
						256	250	245	239	233	228	224	218	213	209	205	200	196	191	188
72DLH18	59	72	807	68580	68580	528	520	512	505	497	490	483	479	470	463	457	450	444	438	432
						289	283	276	270	265	258	252	247	242	236	231	227	222	217	212
72DLH19	70	72	946	80400	80400	619	609	600	591	582	573	565	557	549	541	533	526	518	511	504
						328	321	313	306	300	293	286	280	274	268	263	257	251	247	241

ASD

STANDARD LOAD TABLE LONGSPAN STEEL JOISTS, DLH-SERIES

Based on a 50 ksi Maximum Yield Strength - Loads Shown in Pounds per Linear Foot (plf)

Joist Designation	Approx. Wt in Lbs. Per Linear Ft (Joists only)	Depth in inches	Max Load plf	SAFE LOAD* in Lbs. Between		SPAN IN FEET															
			< 81	81-99	100-111	112	115	118	121	124	127	130	133	136	139	142	145	148	151	155	160
80DLH15	40	80	644	52160	52160	466	442	421	401	383	366	350	335	321	307	295	283	272	261	247	231
						321	296	275	255	236	220	205	192	179	167	157	147	139	130	120	109
80DLH16	46	80	774	62680	62680	560	535	509	485	461	439	419	400	383	366	350	336	322	309	293	275
						375	347	321	297	276	257	240	224	209	196	184	172	162	152	141	128
80DLH17	53	80	894	72420	72420	647	617	587	559	533	510	487	466	446	427	410	393	378	363	345	323
						451	416	386	358	332	309	288	269	252	235	221	207	195	183	169	154
80DLH18	60	80	1010	81840	81840	731	696	662	631	602	575	550	526	504	482	463	444	427	410	389	366
						516	477	441	409	380	354	330	308	288	270	253	237	223	210	194	176
80DLH19	67	80	1179	95480	95480	853	812	773	736	701	670	640	612	585	560	537	516	495	476	451	423
						578	533	493	458	425	396	369	344	322	301	283	266	250	235	217	197
80DLH20	75	80	1325	107320	107320	964	921	882	845	807	771	736	704	674	645	618	594	570	547	520	487
						646	596	552	512	475	443	412	385	360	337	316	297	279	263	243	220
			< 89	89-99	100-120	121	124	127	130	133	136	139	142	145	148	151	155	160	165	170	175
88DLH16	46	88	699	62180	62180	514	490	467	447	428	410	394	378	363	349	335	318	299	281	265	251
						361	336	313	291	272	254	238	223	210	197	186	172	156	143	130	119
88DLH17	51	88	790	70300	70300	581	553	526	502	479	458	439	420	403	386	371	352	330	310	292	274
						404	375	349	325	304	284	266	249	234	220	207	191	173	159	146	133
88DLH18	58	88	906	80620	80620	667	635	605	577	551	527	504	483	463	444	426	404	379	356	335	316
						460	427	397	370	346	323	303	284	267	250	236	218	199	181	165	152
88DLH19	65	88	1048	93260	93260	771	734	699	666	636	608	582	557	534	513	492	467	438	411	387	364
						521	484	450	420	392	367	343	322	302	284	267	248	225	205	187	172
88DLH20	76	88	1206	107300	107300	889	854	821	789	755	723	694	665	639	614	590	560	527	495	467	440
						623	579	539	502	469	438	410	385	361	340	320	296	269	246	224	206
88DLH21	89	88	1487	132340	132340	1099	1045	996	950	907	867	829	794	762	731	702	666	624	586	551	519
						724	673	626	584	545	509	477	447	420	395	372	344	313	285	261	239
			< 97	97-99	100-129	130	133	136	139	142	145	148	151	155	160	165	170	175	180	185	190
96DLH17	52	96	724	70180	70180	540	517	496	474	456	438	421	405	385	362	339	320	302	284	269	255
						389	363	339	318	298	280	263	247	229	208	190	173	159	146	134	124
96DLH18	58	96	814	79000	79000	608	583	559	535	513	493	475	457	435	410	386	364	344	326	308	292
						443	413	386	362	340	319	300	282	261	237	216	198	181	166	153	141
96DLH19	66	96	974	94440	94440	727	697	667	638	611	585	561	539	512	480	451	424	401	378	357	338
						502	469	438	410	385	361	340	320	296	269	246	224	206	189	174	161
96DLH20	74	96	1096	106280	106280	824	789	754	722	691	662	635	610	579	543	510	481	453	428	405	382
						569	531	496	465	436	409	385	362	336	305	277	254	233	214	196	181
96DLH21	90	96	1375	133340	133340	1027	982	940	900	864	829	797	766	728	684	643	605	571	539	510	482
						698	652	610	571	535	503	473	445	412	374	341	312	286	263	242	224
96DLH22	102	96	1540	149380	149380	1150	1108	1067	1028	991	957	921	886	843	792	745	702	664	627	594	562
						811	757	708	663	622	584	549	517	479	435	396	362	332	305	281	259
			< 105	105-138		139	142	145	148	151	155	160	165	170	175	180	185	190	195	200	205
104DLH18	59	104	733	76980		554	532	512	489	472	450	423	400	378	358	339	321	305	290	276	263
						426	400	375	353	332	307	279	255	233	213	195	180	167	154	142	132
104DLH19	67	104	892	93620		674	647	622	598	574	546	513	485	457	432	409	387	368	350	332	315
						484	453	426	401	377	349	317	289	265	242	222	204	189	175	162	150
104DLH20	75	104	1002	105260		764	738	714	688	661	629	591	555	522	493	465	440	417	395	375	357
						548	513	483	453	427	395	359	327	299	274	251	232	214	198	184	170
104DLH21	90	104	1260	132320		956	917	881	847	813	773	727	685	647	611	578	547	519	493	469	446
						673	632	593	558	525	486	442	403	368	337	307	284	263	244	226	209
104DLH22	104	104	1413	148360		1071	1034	999	966	934	893	841	792	747	706	668	633	600	570	542	516
						783	734	689	648	610	564	513	468	428	392	359	331	306	283	262	244
104DLH23	109	104	1556	163400		1181	1141	1096	1052	1009	956	899	845	795	750	708	670	635	602	571	543
						819	768	721	678	638	590	536	489	447	410	377	347	320	296	274	254
			< 113	113-147		148	151	155	160	165	170	175	180	185	190	195	200	205	210	215	220
112DLH19	67	112	815	92100		623	600	571	537	506	478	451	428	406	386	366	348	332	317	303	289
						466	439	406	369	336	308	281	259	238	220	203	189	175	162	151	142
112DLH20	76	112	922	104240		710	688	657	618	582	549	520	493	468	445	422	402	383	365	348	333
						528	497	459	418	381	348	319	293	270	249	231	213	198	184	171	160
112DLH21	91	112	1162	131300		891	858	816	767	722	681	644	610	578	549	521	496	473	450	430	411
						650	612	566	514	469	429	393	361	333	306	283	263	244	227	211	198
112DLH22	104	112	1304	147340		999	967	928	880	833	787	744	705	668	635	602	574	546	521	497	474
						755	711	657	598	545	498	457	419	386	356	329	306	283	264	246	229
112DLH23	110	112	1437	162360		1102	1067	1023	970	913	859	810	765	724	686	651	618	588	560	533	509
						790	744	688	625	571	522	478	439	404	373	345	320	297	276	257	239
112DLH24	131	112	1703	192440		1304	1263	1212	1151	1087	1026	970	919	871	828	786	748	713	680	648	619
						957	901	834	758	691	632	579	532	489	451	418	387	359	334	311	291
			< 121	121-165		166	170	175	180	185	190	195	200	205	210	215	220	225	230	235	240
120DLH20	77	120	819	99100		597	571	538	510	484	461	438	418	399	380	362	347	332	318	305	292
						430	400	367	338	311	287	265	246	228	212	198	185	172	161	151	142
120DLH21	92	120	1019	123240		748	714	675	639	606	576	548	521	497	474	452	432	414	396	379	363
						530	494	452	416	383	353	326	303	281	262	244	227	212	199	186	175
120DLH22	104	120	1168	141280		855	823	779	737	699	665	632	602	574	547	522	499	477	457	438	420
						616	574	526	483	445	411	380	352	327	304	283	265	247	231	217	204
120DLH23	111	120	1292	156320		943	907	858	813	771	733	697	664	632	602	574	548	524	501	479	459
						644	601	551	506	466	430	397	369	341	318	296	276	258	241	227	213
120DLH24	132	120	1532	185380		1117	1073	1015	961	912	867	824	785	748	713	681	651	623	596	571	548
						781	728	667	613	565	521	482	447	414	386	359	335	313	293	275	258
120DLH25	152	120	1756	212420		1284	1231	1165	1104	1047	994	946	900	858	819	782	748	715	684	656	628
						915	853	782	718	661	610	564	523	485	452	421	393	367	344	322	302

WHAT ARE JOIST GIRDERS?

Joist girders are primary framing members. The design is simple span, typically supporting equally spaced concentrated loads from open web steel joists. These concentrated loads are considered to act at the panel points of the joist girder.

Joist girders are designed to allow for the efficient use of steel in longer spans for primary framing members.

The following weight tables list joist girders from 20" to 96" deep and spans up to 100 feet. (For depths and lengths not listed contact Vulcraft.) The depth designation is determined by the nominal depth at the center of the span, except for offset double pitched girders, where the depth is determined at the ridge.

The standard configuration of a joist girder is parallel chord with underslung ends and bottom chord extensions. (Joist girders can be furnished in other configurations, see below.) The standard depth of bearing for joist girders is 7 1/2 inches at the end of the bearing seat.*

The standard method of connecting girders to columns is two 3/4" diameter A325 bolts. A loose connection of the lower chord to the column or other support is required during erection in order to stabilize the lower chord laterally and to help brace the joist girder against overturning. **CAUTION: IF A RIGID CONNECTION OF THE BOTTOM CHORD IS TO BE MADE TO COLUMN OR OTHER SUPPORT, IT IS TO BE MADE ONLY AFTER THE APPLICATION OF THE DEAD LOADS. THE JOIST GIRDER IS THEN NO LONGER SIMPLY SUPPORTED AND THE SYSTEM MUST BE INVESTIGATED FOR CONTINUOUS FRAME ACTION BY THE SPECIFYING PROFESSIONAL.**

Joist girders along the perimeter, with joists coming in from one side only, and those with unbalanced loads must be designed such that the reactions pass through the center of the joist girder.

The weight tables list the approximate weight per linear foot for a joist girder supporting the panel point loads given by the specifying engineer. **NOTE: THE WEIGHT OF THE JOIST GIRDER MUST BE INCLUDED IN THE PANEL POINT LOAD. (SEE THE EXAMPLE ON PAGE 180).**

For calculating the approximate deflection or checking ponding the following formula may be used in determining the approximate moment of inertia of the joist girder. $I_{JG} = 0.027\ NPLd$

Where N = number of joist spaces, P = panel point load in kips, L = joist girder length in feet and d = effective depth of the joist girder in inches. Contact Vulcraft if a more exact joist girder moment of inertia must be known.

*Increase seat depth to 10" if weight of joist girder appears to the right of the stepped blue lines in the weight tables.

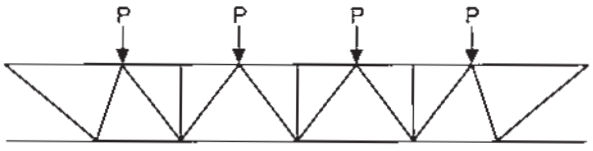

G TYPE

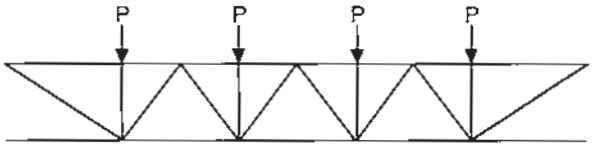

VG TYPE

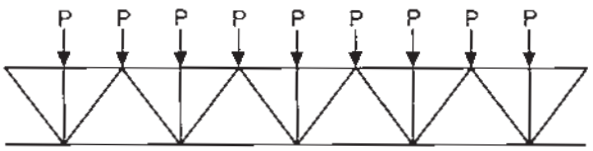

BG TYPE

OTHER CONFIGURATIONS AVAILABLE ARE:

DOUBLE PITCH TC, UNDERSLUNG

SINGLE PITCH TC, UNDERSLUNG

OFFSET DOUBLE PITCH TC, UNDERSLUNG

SEE PAGE 180
FOR DESIGN EXAMPLE

NOTE: JOIST GIRDER WEB CONFIGURATION MAY VARY FROM THAT SHOWN. IF EXACT CONFIGURATION IS REQUIRED CONTACT VULCRAFT.

JOIST GIRDER NOTES

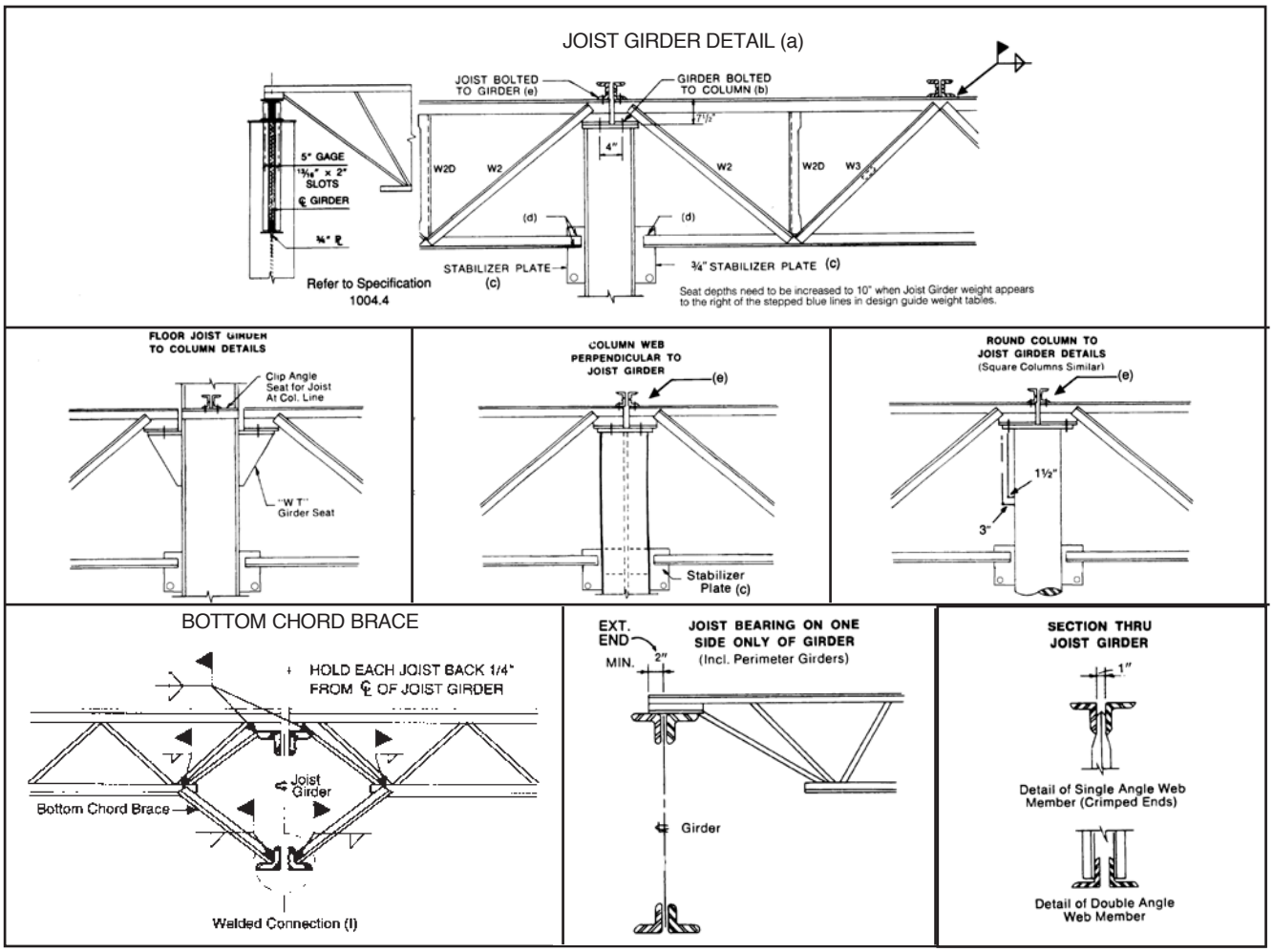

SEE PAGE 122 FOR MOMENT CONNECTION DETAILS

(a) All Joist Girder dimensions shown are subject to change when required by the physical size of large Joist Girders. If changes are necessary Vulcraft will so note on the placement plans.

(b) The standard connection for Joist Girders to columns is 13/16 inch slots for 3/4 inch bolts in girder bearings. **The girder erection bolts are by others.** If the specifying professional wishes to use the Joist Girder bearing to transmit horizontal loads, the required amount of weld to connect the Joist Girder seat to the column should be specified. For additional information see the section of this catalog "JOIST GIRDERS IN MOMENT RESISTIVE FRAMES." (page 121)

(c) Stabilizer plates between the bottom chord angles brace the Joist Girder against overturning during erection and also provide needed lateral bracing for load cases where the bottom chord may be subject to compression such as net uplift. (Refer to SJI 1004.5)

(d) Joist Girder bottom chord struts do not require welding to the stabilizer plate unless required by design to transmit horizontal forces. When welding is required, the amount of weld should be specified by the specifying professional. UNLESS OTHERWISE SPECIFIED, BOTTOM CHORD STRUTS SHOULD NOT BE WELDED.

(e) Joists are connected to the girder by welding except that the joists at (or nearest) the column shall also be bolted (O.S.H.A. Sec. 1910.12 Construction Standards Sec 1518.751).

(f) The l/r_y of the bottom chord of the Joist Girder cannot exceed 240. For STANDARD Joist Girders, the specifying engineer can use the "Joist Girder Bottom Chord Brace Chart" in conjunction with the "Design Guide Weight Table/Joist Girders, G Series" to select the correct number of bottom chord braces. Joist Girders which must resist uplift, end moments, or axial bottom chord forces may require additional braces.

JOIST GIRDER NOTES

If fixed end moments or uplift are present, the specifying professional should also specify bottom chord braces to be designed and furnished by the joist girder manufacturer. If any additional braces are required due to the compression load in the bottom chord, Vulcraft will indicate their location on the placement plans. Bottom chord braces may be either welded or bolted to the girder, but are typically welded to the joist.

JOIST GIRDER BOTTOM CHORD BRACE CHART*			
	SPAN IN FEET		
JOIST GIRDER WEIGHT/FT	NO BC BRACES	ONE BC BRACE @ CENTERLINE	TWO BC BRACES @ 1/3 POINTS
0-22	0' to 24'	>24' to 49'	>49' to 73'
23-30	0' to 28'	>28' to 57'	>57' to 85'
31-45	0' to 32'	>32' to 65'	>65' to 97'
46-66	0' to 36'	>36 to 73'	>73' to 110'
67-87	0' to 41'	>41' to 82'	>82' to 123'
88-135	0' to 49'	>49' to 98'	>98' to 147'
136-173	0' to 57'	>57' to 114'	>114' to 171'

* The bottom chords must be restrained in accordance with Section 1004.5 of The SJI Specifications.

ECONOMY TIPS

1. Designate Joist Girder with exact load required, such as 60G8N11.2K.
2. If Joist Girder depth is limited below the optimum depth as shown in the weight tables, use the maximum depth permitted by the building system: such as 53G8N12K (odd depths can be designed and furnished).
3. The Joist Girder designations shown in the weight guide are typical types included only as a guide. The specifying professional is encouraged to specify the exact depth, span and loading that best suits the building.
4. A Joist Girder depth in inches approximately equal to the span in feet is often a good combination for economy.
5. The specifying professional is urged to investigate several combinations of bay sizes and joist spaces to find the most economical combination.
6. The following table illustrates the economy possible using this system.

Table G-1 ROOF SYSTEM WEIGHT FOR RECOMMENDED BAY SIZES							
BAY SIZE		Weight of joists* + Girders** = Total (PSF)***					
Joist Span	Girder Span	Design Load (PSF) 35 (PSF)	40 (PSF)	45 (PSF)	50 (PSF)	Joist Space (Ft.)	Girder Depth (In.)
40'	40'	1.69 + .75 = 2.44	1.78 + .83 = 2.61	1.90 + .90 = 2.80	2.07 + 1.03 = 3.10	6.67	48
40'	50'	1.73 + .95 = 2.68	1.90 + 1.08 = 2.98	2.02 + 1.18 = 3.20	2.13 + 1.28 = 3.41	6.25	60
40'	60'	1.69 + 1.13 = 2.82	1.78 + 1.30 = 3.08	1.90 + 1.40 = 3.30	2.07 + 1.53 = 3.60	6.67	72
45'	40'	1.89 + .71 = 2.60	2.04 + .80 = 2.84	2.14 + .89 = 3.03	2.41 + .96 = 3.37	6.67	48
45'	50'	1.98 + .96 = 2.94	2.11 + 1.09 = 3.20	2.22 + 1.16 = 3.38	2.40 + 1.29 = 3.69	6.25	60
45'	60'	1.89 + 1.16 = 3.05	2.04 + 1.24 = 3.28	2.14 + 1.38 = 3.52	2.41 + 1.49 = 3.90	6.67	72
50'	40'	2.19 + .72 = 2.91	2.28 + .80 = 3.08	2.53 + .86 = 3.39	2.80 + 1.06 = 3.86	6.67	48
50'	50'	2.21 + .92 = 3.13	2.43 + 1.00 = 3.43	2.61 + 1.12 = 3.73	2.70 + 1.20 = 3.90	6.25	60
50'	60'	2.19 + 1.12 = 3.31	2.28 + 1.22 = 3.50	2.53 + 1.34 = 3.87	2.80 + 1.50 = 4.30	6.67	72

* Weight of joists in pounds per square foot.
** Weight of the joist girders in pounds per square foot.
*** Total weight of joists and joist girders in pounds per square foot.

The larger bay sizes become more economical as the column heights increase and in localities with high erection labor costs. Larger bays speed construction by reducing the number of pieces and therefore the number of crane lifts. Encasing the columns for fire proofing or decoration also makes the larger bays more attractive.

JOIST GIRDER IN MOMENT RESISTANT FRAMES

When a Joist Girder is used as a component of a moment resistive frame, both the design wind moment and any continuity (usually live load) moment must be specified for each end of each affected Joist Girder. Provided this information, Vulcraft will design the Joist Girder as a simply supported truss for full gravity loading. The “fixed end” moments are then applied to the Joist Girder. Using the appropriate combinations of the gravity loads, the wind moments, and/or the continuity moments, the critical member stresses are identified and the Joist Girder members are sized accordingly.

The Specifying Professional shall clarify when allowable stresses are permitted to be increased or load combinations reduced. **(Vulcraft does not design the Joist Girder for any dead load moments unless specifically instructed to do so on the structural drawings.)** For this reason it is very important that on the structural drawings the specifying professional specify that all dead loads be applied to the Joist Girders before the bottom chord struts are welded to the stabilizer plates.

One of the most important considerations of using a Joist Girder in a moment resistive frame is the connection of the Joist Girder to the column. As with a beam connection, special provisions must be made to develop the required moment capacity. As can be readily seen in Figure 1, the use of a standard Joist Girder seat results in an eccentric moment due to the depth of the seat. This moment must be resisted by the weld group connecting the Joist Girder seat to the cap plate of the column.

Vulcraft has done extensive testing of the maximum eccentric top chord force capacity for joist girders. Based on this test program, the maximum horizontal load for 7.5 inch deep seats are presented in Table 1 (below)

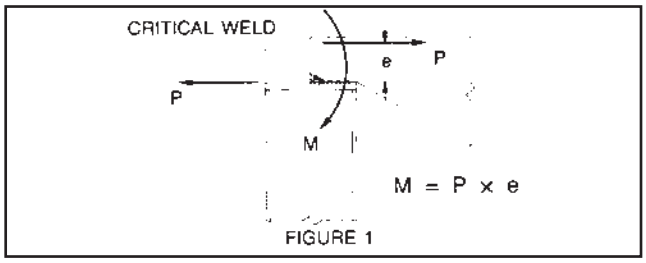

FIGURE 1

Joist Girder (7.5" Seat) Top Chord Leg Size	ASD P_a * kips	LRFD ϕP_n * kips
2.5"	4	6
3.0"	8	12
3.5" and larger	10	15

Table 1

*These values are based on using 3/4 inch A325 bolts and a minimum of two 1/4 inch fillet welds 5 inches long along the sides of the seat. Vulcraft must be notified of seat forces for final seat design.

If the axial load due only to the wind moment does not exceed the values in Table 1, a strap angle connecting the Joist Girders together as shown in Figure 2 can be used to resist the continuity moments, By tying the Joist Girder ends together, the Joist Girder-to-cap plate connection need only resist the wind loads, **the strap angles do not transfer wind moments.** The design of such a strap angle to resist the continuity moments is the responsibility of the specifying professional.

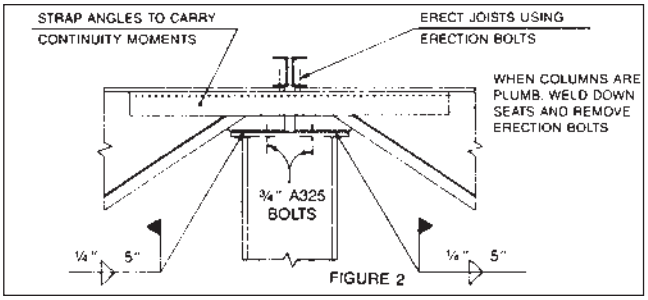

FIGURE 2

When the end moments on the Joist Girders are too large for the seat to resist, it is necessary to utilize a moment plate as shown in Details A-F. The use of this simple moment plate virtually eliminates all eccentricity problems.

By using the equations and Table 2 below, the specifying professional can determine the minimum Joist Girder top chord width for most Joist Girders. If the end moments are very large, the Joist Girder loads and/or spacings vary, or other special conditions exist, a more exact analysis is required. Once the Joist Girder top chord width is known, the specifying professional can easily size the moment plate and its weld requirements to complete the connection detail.

EQUATION 1 (ODD NO. OF JOIST SPACES)

$$A = \frac{.028P}{D} \quad (N^2S - .67N + .67 - S)$$

EQUATION 2 (EVEN NO. OF JOIST SPACES)

$$A = \frac{.028P}{D} \quad (N^2S - .67N + .67)$$

Where: P = Panel point load (kips), N = No. of joist spaces, S = Joist spacing (ft.), D = Joist Girder depth (in.)

Table 2*

A	Minimum Top Chord Width
0.95 - 1.19	6”
1.20 - 1.78	7”
1.79 - 2.48	8”
2.49 - 3.75	9”
3.76 - 4.76	11”
4.78 - 8.44	13”
Greater than 8.44	Consult Vulcraft

Please note that this chart is to be used only for designing moment plates. It is not intended for use as a general detailing aid.

*The bearing seat width may be larger than the top chord width. Contact Vulcraft if seat width is needed for determining column plate sizes.

MOMENT CONNECTION DETAILS

Presented below are six suggested details for a moment resistive connection involving roof Joist Girders. Similar details should be utilized for longspan joists with end moments. In all cases, the bottom chord is to be connected to the column with a vertical stabilizer plate which is to be sized to carry the required load and obtain required weld (use 6 x 6 x 3/4 plate minimum for Joist Girders).

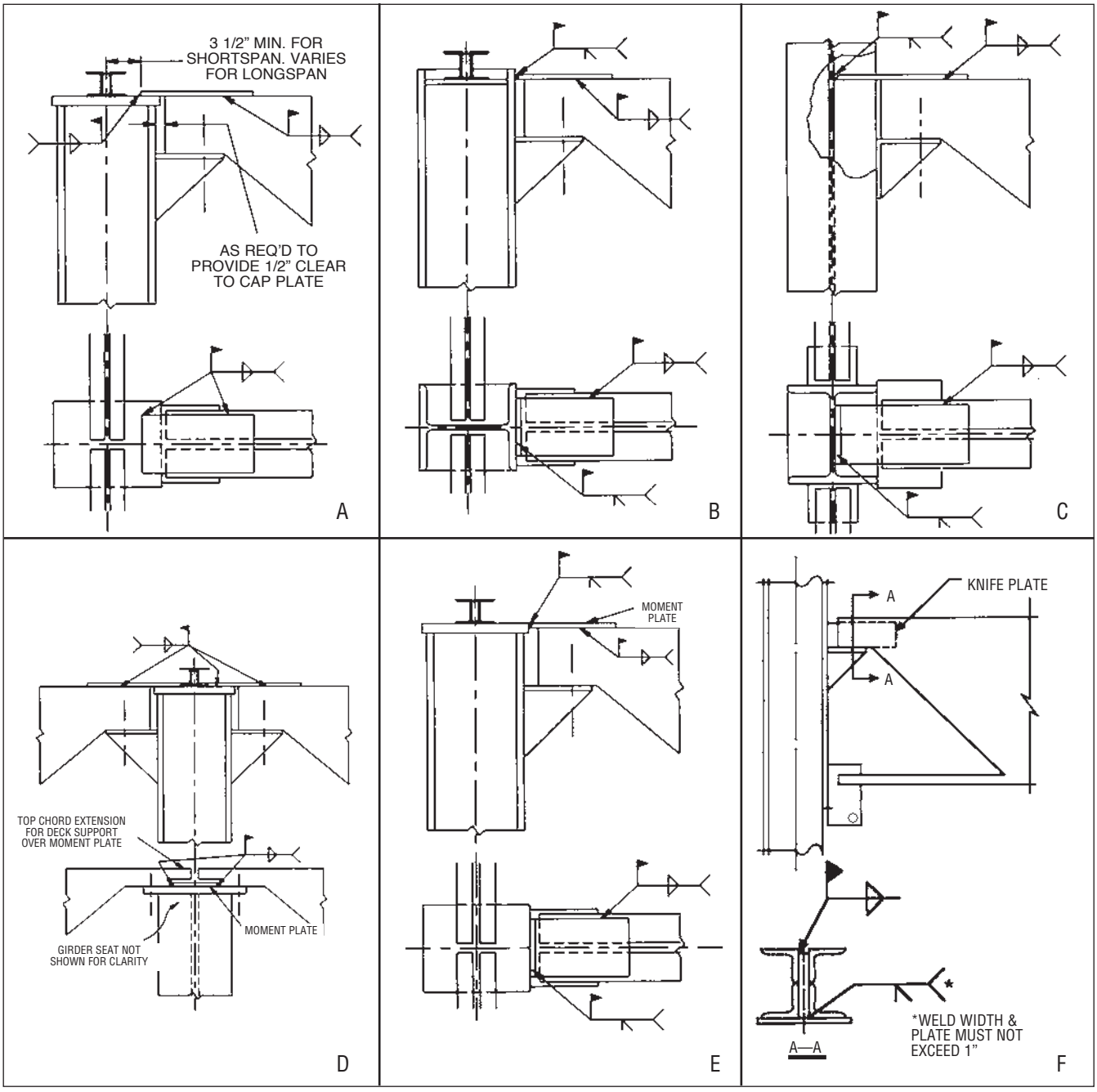

N O T E S :

(1) Connections type B & C would also be recommended for floor girder details.
(2) Where a backer bar is required for groove welds, additional clearance must be provided when determining girder hold back dimension.
(3) Similar details would apply at other types of columns.
(4) Additional stiffener plates as required not shown for clarity.
(5) In all details, moment plate design and material is not by Vulcraft.

STANDARD SPECIFICATION
FOR JOIST GIRDERS

Adopted by the Steel Joist Institute November 4, 1985
Revised to May 18, 2010, Effective December 31, 2010

SECTION 1000.
SCOPE AND DEFINITION

1000.1 SCOPE

The *Standard Specification for Joist Girders*, hereafter referred to as the Specification, covers the design, manufacture, application, and handling and erection of Joist Girders in buildings or other structures, where other structures are defined as those structures designed, manufactured, and erected in a manner similar to buildings. Joist Girders shall be designed using Allowable Stress Design (ASD) or Load and Resistance Factor Design (LRFD) in accordance with this Specification. Joist Girders shall be erected in accordance with the Occupational Safety and Health Administration (OSHA), U.S. Department of Labor, Code of Federal Regulations 29CFR Part 1926 Safety Standards for Steel Erection, Section 1926.757 Open Web Steel Joists.

This Specification includes Sections 1000 through 1005.

1000.2 DEFINITION

The term "Joist Girders", as used herein, refers to open web, load-carrying members utilizing hot-rolled or cold-formed steel, including cold-formed steel whose yield strength has been attained by cold working. Joist Girders are open web steel trusses used as primary framing members. They are designed as simple spans supporting concentrated loads for a floor or roof system. These concentrated loads are normally considered to act at the top chord panel points of the Joist Girders. Joist Girders have been standardized in depths from 20 inches (508 mm) through 120 inches (3048 mm), for spans from 20 feet (6096 mm) through 120 feet (36576 mm).

The Joist Girder standard designation in ASD is determined by its nominal depth in inches (mm), the letter "**G**", followed by the number of joist spaces, the letter "**N**", and finally the load in kips (kN) at each panel point, and the letter "**K**". The Joist Girder standard designation in LRFD is determined by its nominal depth in inches (mm), the letter "**G**", followed by the number of joist spaces, the letter "**N**", and finally the factored load in kips (kN) at each panel point, and the letter "**F**". Joist Girders shall be designed in accordance with these specifications to support the loads defined by the **specifying professional**.

Joist Girders are designed and manufactured as either simple framing members with underslung ends and bottom chord extensions or as part of an ordinary steel moment frame (OMF). When used as part of an OMF the **specifying professional** shall be responsible for carrying out all the required frame analyses (i.e. first-order and second-order), provide all the required load information and stiffness data to the joist manufacturer, and indicate the type of Joist Girder to column connections that are being designed on the contract documents.

A pitch of the Joist Girder top chord up to 1/2 inch per foot (1:24) is allowed. The standard Joist Girder designation depth shall be the depth at mid-span.

1000.3 STRUCTURAL DESIGN DRAWINGS AND SPECIFICATIONS

The design drawings and specifications shall meet the requirements in the *Code of Standard Practice for Steel Joists and Joist Girders*, except for deviations specifically identified in the design drawings and/or specifications.

SECTION 1001. REFERENCED SPECIFICATIONS, CODES AND STANDARDS

1001.1 REFERENCES

American Institute of Steel Construction, Inc. (AISC)

ANSI/AISC 360-10 *Specification for Structural Steel Buildings*

American Iron and Steel Institute (AISI)

ANSI/AISI S100-2007 *North American Specification for Design of Cold-Formed Steel Structural Members*

ANSI/AISI S100-07/S1-09, *Supplement No. 1 to the North American Specification for the Design of Cold-Formed Steel Structural Members*, 2007 Edition

ANSI/AISI S100-07/S2-10, *Supplement No. 2 to the North American Specification for the Design of Cold-Formed Steel Structural Members*, 2007 Edition

American Society of Testing and Materials, ASTM International (ASTM)

ASTM A6/A6M-09, Standard Specification for General Requirements for Rolled Structural Steel Bars, Plates, Shapes, and Sheet Piling

ASTM A36/A36M-08, Standard Specification for Carbon Structural Steel

ASTM A242/242M-04 (2009), Standard Specification for High-Strength Low-Alloy Structural Steel

ASTM A307-07b, Standard Specification for Carbon Steel Bolts and Studs, 60 000 PSI Tensile Strength

ASTM A325/325M-09, Standard Specification for Structural Bolts, Steel, Heat Treated, 120/105 ksi [830 MPa] Minimum Tensile Strength

ASTM A370-09ae1, Standard Test Methods and Definitions for Mechanical Testing of Steel Products

ASTM A500/A500M-07, Standard Specification for Cold-Formed Welded and Seamless Carbon Steel Structural Tubing in Rounds and Shapes

ASTM A529/A529M-05, Standard Specification for High-Strength Carbon-Manganese Steel of Structural Quality

ASTM A572/A572M-07, Standard Specification for High-Strength Low-Alloy Columbium-Vanadium Structural Steel

ASTM A588/A588M-05, Standard Specification for High-Strength Low-Alloy Structural Steel, up to 50 ksi [345 MPa] Minimum Yield Point, with Atmospheric Corrosion Resistance

ASTM A606/A606M-09, Standard Specification for Steel, Sheet and Strip, High-Strength, Low-Alloy, Hot-Rolled and Cold-Rolled, with Improved Atmospheric Corrosion Resistance

ASTM A992/A992M-06a, Standard Specification for Structural Steel Shapes

ASTM A1008/A1008M-09, Standard Specification for Steel, Sheet, Cold-Rolled, Carbon, Structural, High-Strength Low-Alloy and High-Strength Low-Alloy with Improved Formability, Solution Hardened, and Bake Hardenable

ASTM A1011/A1011M-09a, Standard Specification for Steel, Sheet and Strip, Hot-Rolled, Carbon, Structural, High-Strength Low-Alloy, High-Strength Low-Alloy with Improved Formability, and Ultra-High Strength

American Welding Society (AWS)

AWS A5.1/A5.1M-2004, Specification for Carbon Steel Electrodes for Shielded Metal Arc Welding

AWS A5.5/A5.5M:2006, Specification for Low-Alloy Steel Electrodes for Shielded Metal Arc Welding

AWS A5.17/A5.17M-97:R2007, Specification for Carbon Steel Electrodes and Fluxes for Submerged Arc Welding

AWS A5.18/A5.18M:2005, Specification for Carbon Steel Electrodes and Rods for Gas Shielded Arc Welding

AWS A5.20/A5.20M:2005, Specification for Carbon Steel Electrodes for Flux Cored Arc Welding

AWS A5.23/A5.23M:2007, Specification for Low-Alloy Steel Electrodes and Fluxes for Submerged Arc Welding

AWS A5.28/A5.28M:2005, Specification for Low-Alloy Steel Electrodes and Rods for Gas Shielded Arc Welding

AWS A5.29/A5.29M:2005, Specification for Low Alloy Steel Electrodes for Flux Cored Arc Welding

1001.2 OTHER REFERENCES

The following references are non-ANSI approved documents and as such, are provided solely as sources of commentary or additional information related to topics in this Specification:

Federal Register, Department of Labor, Occupational Safety and Health Administration (2001), 29 CFR Part 1926 Safety Standards for Steel Erection; Final Rule, §1926.757 Open Web Steel Joists - January 18, 2001, Washington, D.C.

American Society of Civil Engineers (ASCE)

SEI/ASCE 7-10 *Minimum Design Loads for Buildings and Other Structures*

Steel Joist Institute (SJI)

SJI-COSP-2010, *Code of Standard Practice for Steel Joists and Joist Girders*

Technical Digest No. 3 (2007), *Structural Design of Steel Joist Roofs to Resist Ponding Loads*

Technical Digest No. 5 (1988), *Vibration of Steel Joist-Concrete Slab Floors*

Technical Digest No. 6 (2011), *Structural Design of Steel Joist Roofs to Resist Uplift Loads*

Technical Digest No. 8 (2008), *Welding of Open Web Steel Joists and Joist Girders*

Technical Digest No. 9 (2008), *Handling and Erection of Steel Joists and Joist Girders*

Technical Digest No. 10 (2003), *Design of Fire Resistive Assemblies with Steel Joists*

Technical Digest No. 11 (2007), *Design of Lateral Load Resisting Frames Using Steel Joists and Joist Girders*

Technical Digest No. 12 (2007), *Evaluation and Modification of Open Web Steel Joists and Joist Girders*

Steel Structures Painting Council (SSPC) (2000), *Steel Structures Painting Manual, Volume 2, Systems and Specifications*, Paint Specification No. 15, Steel Joist Shop Primer, May 1, 1999, Pittsburgh, PA.

SECTION 1002.
MATERIALS

1002.1 STEEL

The steel used in the manufacture of Joist Girders shall conform to one of the following ASTM Specifications:

- Carbon Structural Steel, ASTM A36/A36M.
- High-Strength Low-Alloy Structural Steel, ASTM A242/A242M.
- Cold-Formed Welded and Seamless Carbon Steel Structural Tubing in Rounds and Shapes, ASTM A500/A500M.
- High-Strength Carbon-Manganese Steel of Structural Quality, ASTM A529/A529M.
- High-Strength Low-Alloy Columbium-Vanadium Structural Steel, ASTM A572/A572M.
- High-Strength Low-Alloy Structural Steel up to 50 ksi [345 MPa] Minimum Yield Point with Atmospheric Corrosion Resistance, ASTM A588/A588M.
- Steel, Sheet and Strip, High-Strength, Low-Alloy, Hot-Rolled and Cold-Rolled, with Improved Atmospheric Corrosion Resistance, ASTM A606/A606M.
- Structural Steel Shapes, ASTM A992/A992M.
- Steel, Sheet, Cold-Rolled, Carbon, Structural, High-Strength Low-Alloy, High-Strength Low-Alloy with Improved Formability, Solution Hardened, and Bake Hardenable, ASTM A1008/A1008M.
- Steel, Sheet and Strip, Hot-Rolled, Carbon, Structural, High-Strength Low-Alloy, High-Strength Low-Alloy with Improved Formability, and Ultra High Strength, ASTM A1011/A1011M.

or shall be of suitable quality ordered or produced to other than the listed specifications, provided that such material in the state used for final assembly and manufacture is weldable and is proved by tests performed by the producer or manufacturer to have the properties specified in Section 1002.2.

1002.2 MECHANICAL PROPERTIES

Steel used for Joist Girders shall have a minimum yield strength determined in accordance with one of the procedures specified in this section, which is equal to the yield strength* assumed in the design.

*The term "Yield Strength" as used herein shall designate the yield level of a material as determined by the applicable method outlined in paragraph 13.1 “Yield Point”, and in paragraph 13.2 “Yield Strength”, of ASTM A370, *Standard Test Methods and Definitions for Mechanical Testing of Steel Products*, or as specified in paragraph 1002.2 of this specification.

Evidence that the steel furnished meets or exceeds the design yield strength shall, if requested, be provided in the form of an affidavit or by witnessed or certified test reports.

For material used without consideration of increase in yield strength resulting from cold forming, the specimens shall be taken from as-rolled material. In the case of material, the mechanical properties of which conform to the requirements of one of the listed specifications, the test specimens and procedures shall conform to those of such specifications and to ASTM A370.

In the case of material, the mechanical properties of which do not conform to the requirements of one of the listed specifications, the test specimens and procedures shall conform to the applicable requirements of ASTM A370, and the specimens shall exhibit a yield strength equal to or exceeding the design yield strength and an elongation of not less than (a) 20 percent in 2 inches (51 millimeters) for sheet and strip, or (b) 18 percent in 8 inches (203 millimeters) for plates, shapes and bars with adjustments for thickness for plates, shapes and bars as prescribed in ASTM A36/A36M, A242/A242M, A500/A500M, A529/A529M, A572/A572M, A588/A588M, A992/A992M whichever specification is applicable, on the basis of design yield strength.

The number of tests shall be as prescribed in ASTM A6/A6M for plates, shapes, and bars; and ASTM A606/A606M, A1008/A1008M and A1011/A1011M for sheet and strip.

If as-formed strength is utilized, the test reports shall show the results of tests performed on full section specimens in accordance with the provisions of the AISI North American Specifications for the Design of Cold-Formed Steel Structural Members. They shall also indicate compliance with these provisions and with the following additional requirements:

a) The yield strength calculated from the test data shall equal or exceed the design yield strength.

b) Where tension tests are made for acceptance and control purposes, the tensile strength shall be at least 8 percent greater than the yield strength of the section.

c) Where compression tests are used for acceptance and control purposes, the specimen shall withstand a gross shortening of 2 percent of its original length without cracking. The length of the specimen shall be not greater than 20 times the least radius of gyration.

d) If any test specimen fails to pass the requirements of the subparagraphs (a), (b), or (c) above, as applicable, two retests shall be made of specimens from the same lot. Failure of one of the retest specimens to meet such requirements shall be the cause for rejection of the lot represented by the specimens.

1002.3 WELDING ELECTRODES

The following electrodes shall be used for arc welding:

a) For connected members both having a specified minimum yield strength greater than 36 ksi (250 MPa).

AWS A5.1: E70XX
AWS A5.5: E70XX-X
AWS A5.17: F7XX–EXXX, F7XX–ECXXX flux electrode combination
AWS A5.18: ER70S-X, E70C-XC, E70C-XM
AWS A5.20: E7XT-X, E7XT-XM
AWS A5.23: F7XX–EXXX-XX, F7XX–ECXXX-XX
AWS A5.28: ER70S-XXX, E70C-XXX
AWS A5.29: E7XTX-X, E7XTX-XM

b) For connected members both having a specified minimum yield strength of 36 ksi (250 MPa) or one having a specified minimum yield strength of 36 ksi (250 MPa), and the other having a specified minimum yield strength greater than 36 ksi (250 MPa).

AWS A5.1: E60XX
AWS A5.17: F6XX-EXXX, F6XX-ECXXX flux electrode combination
AWS A5.20: E6XT-X, E6XT-XM
AWS A5.29: E6XTX-X, E6XTX-XM
or any of those listed in Section 102.3(a).

Other welding methods, providing equivalent strength as demonstrated by tests, shall be permitted to be used.

1002.4 PAINT

The standard shop paint is intended to protect the steel for only a short period of exposure in ordinary atmospheric conditions and shall be considered an impermanent and provisional coating.

When specified, the standard shop paint shall conform to one of the following:

a) Steel Structures Painting Council Specification, SSPC No. 15.

b) Or, shall be a shop paint which meets the minimum performance requirements of the above listed specification.

SECTION 1003.
DESIGN AND MANUFACTURE

1003.1 METHOD

Joist Girders shall be designed in accordance with these specifications as simply-supported primary load-carrying members. All loads shall be applied through steel joists, and placed along the Joist Girder top chord. Where any applicable design feature is not specifically covered herein, the design shall be in accordance with the following specifications:

a) Where the steel used consists of hot-rolled shapes, bars or plates use the American Institute of Steel Construction, *Specification for Structural Steel Buildings*.

b) For members which are cold-formed from sheet or strip steel, use the American Iron and Steel Institute, *North American Specification for the Design of Cold-Formed Steel Structural Members.*

Design Basis:

Joist Girder designs shall be in accordance with the provisions in this Standard Specification using Load and Resistance Factor Design (LRFD) or Allowable Strength Design (ASD) as specified by the **specifying professional** for the project.

Loads, Forces and Load Combinations:

The loads and forces used for the Joist Girder design shall be calculated by the **specifying professional** in accordance with the applicable building code and specified and provided on the contract drawings.

The load combinations shall be specified by the **specifying professional** on the contract drawings in accordance with the applicable building code or, in the absence of a building code, the load combinations shall be those stipulated in SEI/ASCE 7. For LRFD designs, the load combinations in SEI/ASCE 7, Section 2.3 apply. For ASD designs, the load combinations in SEI/ASCE 7, Section 2.4 apply.

1003.2 DESIGN AND ALLOWABLE STRESSES

Design Using Load and Resistance Factor Design (LRFD)

Joist Girders shall have their components so proportioned that the required stresses, f_u, shall not exceed ϕF_n where

f_u = required stress ksi (MPa)
F_n = nominal stress ksi (MPa)
ϕ = resistance factor
ϕF_n = design stress

Design Using Allowable Strength Design (ASD)

Joist Girders shall have their components so proportioned that the required stresses, f, shall not exceed F_n / Ω where

f = required stress ksi (MPa)
F_n = nominal stress ksi (MPa)
Ω = safety factor
F_n/Ω = allowable stress

Stresses:

For Chords: The calculation of design or allowable stress shall be based on a yield strength, F_y, of the material used in manufacturing equal to 50 ksi (345 MPa).

For all other Joist Girder elements: The calculation of design or allowable stress shall be based on a yield strength, F_y, of the material used in manufacturing, but shall not be less than 36 ksi (250 MPa) or greater than 50 ksi (345 MPa).

Note: Yield strengths greater than 50 ksi shall not be used for the design of any Joist Girder members.

(a) Tension: $\phi_t = 0.90$ (LRFD), $\Omega_t = 1.67$ (ASD)

Design Stress = $0.9F_y$ (LRFD) (1003.2-1)

Allowable Stress = $0.6F_y$ (ASD) (1003.2-2)

(b) Compression: $\phi_c = 0.90$ (LRFD), $\Omega_c = 1.67$ (ASD)

Design Stress = $0.9F_{cr}$ (LRFD) (1003.2-3)

Allowable Stress = $0.6F_{cr}$ (ASD) (1003.2-4)

For members with $\frac{\ell}{r} \le 4.71\sqrt{\frac{E}{QF_y}}$

$$F_{cr} = Q\left[0.658^{\left(QF_y/F_e\right)}\right]F_y \qquad (1003.2\text{-}5)$$

For members with $\frac{\ell}{r} > 4.71\sqrt{\frac{E}{QF_y}}$

$$F_{cr} = 0.877F_e \qquad (1003.2\text{-}6)$$

Where F_e = Elastic buckling stress determined in accordance with Equation 1003.2-7

$$F_e = \frac{\pi^2 E}{\left(\frac{\ell}{r}\right)^2} \qquad (1003.2\text{-}7)$$

In the above equations, ℓ is taken as the distance in inches (millimeters) between panel points for the chord members and the appropriate length for web members, and r is the corresponding least radius of gyration of the member or any component thereof. E is equal to 29,000 ksi (200,000 MPa).

For hot-rolled sections and cold formed angles, Q is the full reduction factor for slender compression members as defined in the AISC *Specification for Structural Steel Buildings*, except that when the first primary compression web member is a crimped-end angle member, whether hot-rolled or cold formed.

$$Q = [5.25/(w/t)] + t \leq 1.0 \qquad (1003.2\text{-}8)$$

Where: w = angle leg length, inches
t = angle leg thickness, inches

or,

$$Q = [5.25/(w/t)] + (t/25.4) \leq 1.0 \qquad (1003.2\text{-}9)$$

Where: w = angle leg length, millimeters
t = angle leg thickness, millimeters

For all other cold-formed sections the method of calculating the nominal compression strength is given in the AISI, *North American Specification for the Design of Cold-Formed Steel Structural Members*.

(c) Bending: $\phi_b = 0.90$ (LRFD), $\Omega_b = 1.67$ (ASD)

Bending calculations are to be based on using the elastic section modulus.

For chords and web members other than solid rounds: $F_n = F_y$

Design Stress = $\phi_b F_n = 0.9F_y$ (LRFD) (1003.2-10)

Allowable Stress = $F_n/\Omega_b = 0.6F_y$ (ASD) (1003.2-11)

For web members of solid round cross section: $F_n = 1.6\ F_y$

Design Stress = $\phi_b F_n = 1.45F_y$ (LRFD) (1003.2-12)

Allowable Stress = $F_n/\Omega_b = 0.95F_y$ (ASD) (1003.2-13)

For bearing plates used in Joist Girder seats: $F_n = 1.5\ F_y$

Design Stress = $\phi_b F_n = 1.35F_y$ (LRFD) (1003.2-14)

Allowable Stress = $F_n/\Omega_b = 0.90F_y$ (ASD) (1003.2-15)

(d) Weld Strength:

Shear at throat of fillet welds, flare bevel groove welds, partial joint penetration groove welds, and plug/slot welds:

Nominal Shear Stress = $F_{nw} = 0.6F_{exx}$ (1003.2-16)

LRFD: $\phi_w = 0.75$

Design Shear Strength = $\phi R_n = \phi_w F_{nw} A = 0.45F_{exx} A_w$ (1003.2-17)

ASD: $\Omega_w = 2.0$

Allowable Shear Strength = $R_n/\Omega_w = F_{nw}A/\Omega_w = 0.3F_{exx} A_w$ (1003.2-18)

Made with E70 series electrodes or F7XX-EXXX flux-electrode combinations F_{exx} = 70 ksi (483 MPa)

Made with E60 series electrodes or F6XX-EXXX flux-electrode combinations F_{exx} = 60 ksi (414 MPa)

A_w = effective throat area, where:

For fillet welds, A_w = effective throat area, (other design methods demonstrated to provide sufficient strength by testing may be used);

For flare bevel groove welds, the effective weld area is based on a weld throat width, T, where

T (inches) = 0.12D + 0.11 (1003.2-19)

Where D = web diameter, inches

or,

T (mm) = 0.12D + 2.8 (1003.2-20)

Where D = web diameter, mm

For plug/slot welds, A_w = cross-sectional area of the hole or slot in the plane of the faying surface provided that the hole or slot meets the requirements of the American Institute of Steel Construction *Specification for Structural Steel Buildings* (and as described in SJI Technical Digest No. 8, "Welding of Open-Web Steel Joists and Joist Girders").

Strength of resistance welds and complete-joint-penetration groove or butt welds in tension or compression (only when the stress is normal to the weld axis) is equal to the base metal strength:

$\phi_t = \phi_c = 0.90$ (LRFD) $\quad \Omega_t = \Omega_c = 1.67$ (ASD)

Design Stress = $0.9F_y$ (LRFD) (1003.2-21)

Allowable Stress = $0.6F_y$ (ASD) (1003.2-22)

1003.3 MAXIMUM SLENDERNESS RATIOS

The slenderness ratio ℓ/r, where ℓ is the length center-to-center of support points and r is the corresponding least radius of gyration, shall not exceed the following:

Top chord interior panels.....90

Top chord end panels.....120

Compression members other than top chord…….200

Tension members.....240

1003.4 MEMBERS

(a) Chords

The bottom chord shall be designed as an axially loaded tension member. The radius of gyration of the bottom chord about its vertical axis shall not be less than $\ell/240$ where ℓ is the distance between lines of bracing.

The top chord shall be designed as an axial loaded compression member. The radius of gyration of the top chord about the vertical axis shall not be less than Span/575.

The top chord shall be considered as stayed laterally by the steel joists provided positive attachment is made. The outstanding part of the top chord member shall be designed such that the allowable reaction from a single joist is the lesser of:

$$\phi P_p \text{ and } \phi P_p\,(1.6 - f_{au}/\phi Q F_y) \qquad \text{(LRFD, } \phi = 0.9\text{)} \qquad (1003.4\text{-}1)$$

$$0.6P_p \text{ and } 0.6P_p(1.6 - f_a/\Omega Q F_y) \qquad \text{(ASD, } \Omega = 0.6\text{)} \qquad (1003.4\text{-}2)$$

Where:

F_y = Specified minimum yield strength, ksi (MPa)
P_p = Plastic failure mode = $[(t^2F_y)/[2(b\text{-}k)]][g+5.66(b\text{-}k)]$
Q = Form factor defined in Section 1003.2(b)
b = width of the outstanding part of the top chord member, in. (mm)
f_{au} = P_u/A = Required compressive stress, ksi (MPa)
f_a = P/A = Required compressive stress, ksi (MPa)
g = width of bearing seat, in. (mm)
k = value from angle properties or similar dimension for other members
t = thickness of the outstanding part of the top chord member, in. (mm)

The top chord and bottom chord shall be designed such that at each joint:

$$f_{vmod} \le \phi_v f_n \qquad \text{(LRFD, } \phi = 1.00\text{)} \qquad (1003.4\text{-}3)$$

$$f_{vmod} \le f_n/\Omega_v \qquad \text{(ASD, } \Omega = 1.50\text{)} \qquad (1003.4\text{-}4)$$

Where:

f_n = nominal shear stress = $0.6F_y$, ksi (MPa)
f_t = axial stress = P/A, ksi (MPa)
f_v = shear stress = V/bt, ksi (MPa)
f_{vmod} = modified shear stress = $(\tfrac{1}{2})\left(f_t^2 + 4f_v^2\right)^{1/2}$
b = length of vertical part(s) of cross section, in. (mm)
t = thickness of vertical part(s) of cross section, in. (mm)

It is not necessary to design the top chord and bottom chord for the modified shear stress when a round bar web member is continuous through a joint. The minimum required shear of 25 percent of the end reaction is not required when evaluating Equation 1003.4-3 or 1003.4-4.

(b) Web

The vertical shears to be used in the design of the web members shall be determined from full loading, but such vertical shear shall be not less than 25 percent of the end reaction.

Interior vertical web members used in modified Warren type web systems that do not support the direct loads through steel joists shall be designed to resist an axial load of 2 percent of the top chord axial force.

Tension members shall be designed to resist at least 25 percent of their axial force in compression.

(c) Joist Girder Extensions

Joist Girder extensions are defined as one of three types, top chord extensions (TCX), extended ends, or full depth cantilevers.

Joist Girder extensions shall be designed based on the following:

(1) A loading diagram shall be provided for the Joist Girder extension. The diagram shall include the magnitude and location of the loads to be supported, as well as the appropriate load combinations.

Any deflection requirements or limits due to the accompanying loads and load combinations on the Joist Girder extension shall be provided by the **specifying professional**. Unless otherwise specified, the joist manufacturer shall check the extension for the specified deflection limit under live load acting simultaneously on both the Joist Girder base span and the extension.

The joist manufacturer shall consider the effects of Joist Girder extension loading on the base span of the Joist Girder. This includes carrying the design bending moment due to the loading on the extension into the top chord end panel(s), and the effect on the overall Joist Girder chord and web axial forces.

Bracing of Joist Girder extensions shall be clearly indicated on the structural drawings.

(d) Fillers and Ties

In compression members composed of two components, (when fillers, ties or welds are used) they shall be spaced so the ℓ/r ratio for each component does not exceed the ℓ/r ratio of the member as a whole. In tension members composed of two components (when fillers, ties or welds are used), they shall be spaced so that the ℓ/r ratio of each component does not exceed 240. The least radius of gyration shall be used in computing the ℓ/r ratio of a component.

1003.5 CONNECTIONS

(a) Methods

Joist connections and splices shall be made by attaching the members to one another by arc or resistance welding or other accredited methods.

(1) Welded Connections

a) Selected welds shall be inspected visually by the manufacturer. Prior to this inspection, weld slag shall be removed.

b) Cracks are not acceptable and shall be repaired.

c) Thorough fusion shall exist between weld and base metal for the required design length of the weld; such fusion shall be verified by visual inspection.

d) Unfilled weld craters shall not be included in the design length of the weld.

e) Undercut shall not exceed 1/16 inch (2 mm) for welds oriented parallel to the principal stress.

f) The sum of surface (piping) porosity diameters shall not exceed 1/16 inch (2 mm) in any 1 inch (25 mm) of design weld length.

g) Weld spatter that does not interfere with paint coverage is acceptable.

(2) Welded Connections for Crimped-End Angle Web Members

The connection of each end of a crimped angle web member to each side of the chord shall consist of a weld group made of more than a single line of weld. The design weld length shall include, at minimum, an end return of two times the nominal weld size.

(3) Welding Program

Manufacturers shall have a program for establishing weld procedures and operator qualification, and weld sampling and testing. (See Technical Digest 8, "Welding of Open Web Steel Joists and Joist Girders").

(4) Weld Inspection by Outside Agencies (See Section 1004.10 of this specification).

The agency shall arrange for visual inspection to determine that welds meet the acceptance standards of Section 1003.5(a)(1). Ultrasonic, X-Ray, and magnetic particle testing are inappropriate for joists due to the configurations of the components and welds.

(b) Strength

(1) Joint Connections - Joint connections shall develop the maximum force due to any of the design loads, but not less than 50 percent of the strength of the member in tension or compression, whichever force is the controlling factor in the selection of the member.

(2) Shop Splices – Shop splices shall be permitted to occur at any point in chord or web members. Splices shall be designed for the member force, but not less than 50 percent of the member strength. All component parts comprising the cross section of the chord or web member (including reinforcing plates, rods, etc.) at the point of the splice, shall develop an ultimate tensile force of at least 1.2 times the product of the yield strength and the full design area of the chord or web. The "full design area" is the minimum required area such that the required stress shall be less than the design (LRFD) or allowable (ASD) stress.

(c) Field Splices

Field Splices shall be designed by the manufacturer and may be either bolted or welded. Splices shall be designed for the member force, but not less than 50 percent of the member strength.

(d) Eccentricity

Members connected at a joint shall have their center of gravity lines meet at a point, if practical. Eccentricity on either side of the neutral axis of chord members shall be permitted to be neglected when it does not exceed the distance between the centroid and the back of the chord. Otherwise, provision shall be made for the stresses due to eccentricity. Ends of Joist Girders shall be proportioned to resist bending produced by eccentricity at the support.

In those cases where a single angle compression member is attached to the outside of the stem of a tee or double angle chord, due consideration shall be given to eccentricity.

1003.6 CAMBER

Joist Girders shall have approximate cambers in accordance with the following:

TABLE 1003.6-1

Top Chord Length		Approximate Camber	
20'-0″	(6096 mm)	1/4″	(6 mm)
30'-0″	(9144 mm)	3/8″	(10 mm)
40'-0″	(12192 mm)	5/8″	(16 mm)
50'-0″	(15240 mm)	1″	(25 mm)
60'-0″	(18288 mm)	1 1/2″	(38 mm)
70'-0″	(21336 mm)	2″	(51 mm)
80'-0″	(24384 mm)	2 3/4″	(70 mm)
90'-0″	(27432 mm)	3 1/2″	(89 mm)
100'-0″	(30480 mm)	4 1/4“	(108 mm)

For Joist Girder lengths exceeding 100’-0” a camber equal to Span/300 shall be used.

The **specifying professional** shall give consideration to coordinating Joist Girder camber with adjacent framing.

1003.7 VERIFICATION OF DESIGN AND MANUFACTURE

(a) Design Calculations

Companies manufacturing Joist Girders shall submit design data to the Steel Joist Institute (or an independent agency approved by the Steel Joist Institute) for verification of compliance with the SJI Specifications. Design data shall be submitted in detail and in the format specified by the Institute.

(b) In-Plant Inspections

Each manufacturer shall verify his ability to manufacture Joist Girders through periodic In-Plant Inspections. Inspections shall be performed by an independent agency approved by the Steel Joist Institute. The frequency, manner of inspection, and manner of reporting shall be determined by the Steel Joist Institute. The plant inspections are not a guarantee of the quality of any specific joists; this responsibility lies fully and solely with the individual manufacturer.

SECTION 1004.
APPLICATION

1004.1 USAGE

This specification shall apply to any type of structure where steel joists are to be supported directly by Joist Girders installed as hereinafter specified. Where Joist Girders are used other than on simple spans under equal concentrated gravity loading, as prescribed in Section 1003.1, they shall be investigated and modified when necessary to limit the unit stresses to those listed in Section 1003.2. The magnitude and location of all loads and forces, other than equal concentrated gravity loading, shall be provided on the structural drawings. The **specifying professional** shall design the supporting structure, including the design of columns, connections, and moment plates*. This design shall account for the stresses caused by lateral forces and the stresses due to connecting the bottom chord to the column or other structural support.

The designed detail of a rigid type connection and moment plates shall be shown on the structural drawings by the **specifying professional**. The moment plates shall be furnished by other than the joist manufacturer.

*For further reference, refer to Steel Joist Institute Technical Digest 11, "Design of Lateral Load Resisting Frames Using Steel Joists and Joist Girders."

1004.2 SPAN

The span of a Joist Girder shall not exceed 24 times its depth.

1004.3 DEPTH

Joist Girders may have either parallel chords or a top chord pitch of up to 1/2 inch per foot (1:24). The nominal depth of a Joist Girder shall be the depth at mid-span.

1004.4 END SUPPORTS

(a) Masonry and Concrete

A Joist Girder end supported by masonry or concrete shall bear on steel bearing plates and shall be designed as steel bearing. Due consideration of the end reactions and all other vertical or lateral forces shall be taken by the **specifying professional** in the design of the steel bearing plate and the masonry or concrete. The ends of Joist Girders shall extend a distance of not less than 6 inches (152 millimeters) over the masonry or concrete support and be anchored to the steel bearing plate. The plate shall be located not more than 1/2 inch (13 millimeters) from the face of the wall and shall be not less than 9 inches (229 millimeters) wide perpendicular to the length of the girder. The plate is to be designed by the **specifying professional** and shall be furnished by other than the joist manufacturer.

Where it is deemed necessary to bear less than 6 inches (152 millimeters) over the masonry or concrete support, special consideration is to be given to the design of the steel bearing plate and the masonry or concrete by the **specifying professional**. The girders shall bear a minimum of 4 inches (102 millimeters) on the steel bearing plate.

(b) Steel

Due consideration of the end reactions and all other vertical and lateral forces shall be taken by the **specifying professional** in the design of the steel support. The ends of Joist Girders shall extend a distance of not less than 4 inches (102 millimeters) over the steel supports and shall have positive attachment to the support, either by bolting or welding.

1004.5 BRACING

Joist Girders shall be proportioned such that they can be erected without bridging (See Section 1004.9 for bracing required for uplift forces). Therefore, the following requirements shall be met:

a) The ends of the bottom chord are restrained from lateral movement to brace the girder from overturning. For Joist Girders at columns in steel frames, restraint shall be provided by a stabilizer plate on the column.

b) No other loads shall be placed on the Joist Girder until the steel joists bearing on the girder are in place and welded to the girder.

1004.6 BEARING SEAT ATTACHMENTS

(a) Masonry and Concrete

Ends of Joist Girders resting on steel bearing plates on masonry or structural concrete shall be attached thereto with a minimum of two 1/4 inch (6 millimeters) fillet welds 2 inches (51 millimeters) long, or with two 3/4 inch (19 millmeters) ASTM - A307 bolts (minimum), or the equivalent.

(b) Steel

Ends of Joist Girders resting on steel supports shall be attached thereto with a minimum of two 1/4 inch (6 millimeters) fillet welds 2 inches (51 millimeters) long, or with two 3/4 inch (19 millimeters) ASTM - A307 bolts, or the equivalent. In steel frames, bearing seats for Joist Girders shall be fabricated to allow for field bolting.

(c) Uplift

Where uplift forces are a design consideration, roof Joist Girders shall be anchored to resist such forces (Refer to Section 1004.9).

1004.7 DEFLECTION

The deflections due to the design live load shall not exceed the following:

Floors: 1/360 of span.
Roofs: 1/360 of span where a plaster ceiling is attached or suspended.
1/240 of span for all other cases.

The **specifying professional** shall give consideration to the effects of deflection and vibration* in the selection of Joist Girders.

*For further reference, refer to Steel Joist Institute Technical Digest 5, “Vibration of Steel Joist-Concrete Slab Floors" and the Institute's Computer Vibration Program.

1004.8 PONDING

The ponding investigation shall be performed by the **specifying professional**.

*For further reference, refer to Steel Joist Institute Technical Digest 3, “Structural Design of Steel Joist Roofs to Resist Ponding Loads” and AISC Specification for Structural Steel Buildings.

1004.9 UPLIFT

Where uplift forces due to wind are a design requirement, these forces shall be indicated on the contract drawings in terms of NET uplift in pounds per square foot (Pascals). The contract drawings shall indicate if the net uplift is based on ASD or LRFD. When these forces are specified, they shall be considered in the design of Joist Girders and/or bracing. If the ends of the bottom chord are not strutted, bracing shall be provided near the first bottom chord panel points whenever uplift due to wind forces is a design consideration.

*For further reference, refer to Steel Joist Institute Technical Digest 6, “Structural Design of Steel Joist Roofs to Resist Uplift Loads.”

1004.10 INSPECTION

Joist Girders shall be inspected by the manufacturer before shipment to verify compliance of materials and workmanship with the requirements of this specification. If the purchaser wishes an inspection of the Joist Girders by someone other than the manufacturer's own inspectors, they may reserve the right to do so in their "Invitation to Bid" or the accompanying "Job Specifications". Arrangements shall be made with the manufacturer for such inspection of the Joist Girders at the manufacturing shop by the purchaser's inspectors at purchaser's expense.

SECTION 1005.
HANDLING AND ERECTION*

Particular attention shall be paid to the erection of Joist Girders.

Care shall be exercised at all times to avoid damage through careless handling during unloading, storing and erecting. Dropping of Joist Girders shall not be permitted.

In steel framing, where Joist Girders are utilized at column lines, the Joist Girder shall be field-bolted at the column. Before hoisting cables are released and before an employee is allowed on the Joist Girder the following conditions shall be met:

a) The seat at each end of the Joist Girder is attached in accordance with Section 1004.6.

   When a bolted seat connection is used for erection purposes, as a minimum, the bolts shall be snug tightened. The snug tight condition is defined as the tightness that exists when all plies of a joint are in firm contact. This shall be attained by a few impacts of an impact wrench or the full effort of an employee using an ordinary spud wrench.

b) Where stabilizer plates are required the Joist Girder bottom chord shall engage the stabilizer plate.

During the construction period, the contractor shall provide means for the adequate distribution of loads so that the carrying capacity of any Joist Girder is not exceeded.

Joist Girders shall not be used as anchorage points for a fall arrest system unless written direction to do so is obtained from a “qualified person”. [1]

Field welding shall not damage the Joist Girder. The total length of weld at any one cross-section on cold formed members whose yield strength has been attained by cold working and whose as-formed strength is used in the design, shall not exceed 50 percent of the overall developed width of the cold-formed section.

*For a thorough coverage of this topic, refer to SJI Technical Digest 9, "Handling and Erection of Steel Joists and Joist Girders."

[1] See Federal Register, Department of Labor, Occupational Safety and Health Administration (2001), 29 CFR Part 1926 Safety Standards for Steel Erection; Final Rule, §1926.757 Open Web Steel Joists - January 18, 2001, Washington, D.C. for definition of “qualified person”.

DESIGN GUIDE WEIGHT TABLE FOR JOIST GIRDERS
U. S. CUSTOMARY

Based on a 50ksi maximum yield strength

Girder Span (ft)	Joist Spaces (ft)	Girder Depth (in)	Joist Girder Weight – Pounds Per Linear Foot Load on Each Panel Point																				
		LRFD	6K	7.5K	9K	10.5K	12K	13.5K	15K	16.5K	18K	21K	24K	27K	30K	37.5K	45K	52.5K	60K	75K	90K	105K	120K	150K
		ASD	4K	5K	6K	7K	8K	9K	10K	11K	12K	14K	16K	18K	20K	25K	30K	35K	40K	50K	60K	70K	80K	100K
20	2N@ 10.00	16	16	16	16	16	16	16	16	17	18	21	23	26	30	35	41	47	54	69	83	100	108	140
		20	16	16	16	16	16	16	16	16	16	17	19	22	24	31	35	39	44	56	64	76	85	104
		24	16	16	16	16	16	16	17	17	17	17	17	19	20	26	29	34	37	48	57	66	73	88
	3N@ 6.67	16	16	16	16	16	16	18	20	22	24	27	31	35	38	48	54	69	79	101	114	141	152	187
		20	16	16	16	16	16	16	17	19	21	23	26	28	31	38	47	56	64	78	95	109	117	156
		24	16	16	17	17	17	17	17	18	19	23	25	26	31	34	38	45	51	67	80	97	109	122
	4N@ 5.00	16	16	16	18	20	22	26	28	29	32	38	42	50	54	66	83	100	108	140	162	188	209	314
		20	16	16	16	17	20	20	21	23	26	30	34	39	43	52	60	76	85	105	124	145	169	238
		24	16	16	16	16	17	19	20	21	22	25	28	32	38	44	54	61	75	89	107	126	149	189
	5N@ 4.00	16	16	18	19	24	26	29	33	37	39	47	54	59	66	83	101	113	140	172	212	247	296	
		20	16	16	17	19	21	26	28	29	32	37	41	49	53	65	80	95	104	134	167	198	221	296
		24	16	16	17	19	20	22	24	28	28	31	35	39	45	55	67	78	88	109	128	152	183	244
	10N@ 2.00	16	28	33	39	47	54	62	72	78	83	101	109	131	141	195	226	247	358					
		20	23	29	31	37	43	49	56	61	64	77	86	104	108	145	179	203	236	317				
		24	21	25	28	32	39	43	46	55	54	66	80	84	89	119	141	171	197	250	313			
22	2N@ 11	16	18	18	18	18	18	18	19	20	20	23	26	29	32	39	46	53	61	77	98	107	119	158
		20	18	18	18	18	18	18	18	19	19	20	21	23	27	33	37	46	48	62	70	83	101	121
		24	19	19	19	19	19	19	19	19	19	19	20	21	24	29	33	36	42	49	63	72	81	103
	3N@ 7.33	16	15	15	15	16	17	19	23	24	25	29	33	37	40	53	61	73	90	103	129	149	170	207
		20	16	16	16	16	16	17	19	20	23	24	27	30	34	42	48	55	67	80	102	115	132	165
		24	16	16	16	16	16	16	17	18	19	24	24	27	28	36	43	48	57	70	82	97	111	137
	4N@ 5.5	16	16	17	18	21	24	28	30	33	36	40	46	53	58	77	98	100	119	159	179	206	235	
		20	16	16	17	18	20	22	25	27	28	33	37	42	48	60	71	84	102	115	143	165	187	244
		24	16	16	16	17	19	20	20	21	26	27	31	34	40	47	61	69	76	104	113	145	148	206
	6N@ 3.67	16	17	21	26	29	35	39	42	49	50	58	73	82	99	107	139	160	180	237				
		20	17	19	21	26	28	31	34	38	42	51	59	60	68	85	103	122	143	175	222	252	322	
		24	16	17	19	21	25	27	30	32	34	40	47	54	61	75	87	106	113	148	178	202	240	330
	11N@ 2.00	16	32	39	49	57	64	77	82	99	100	113	140	150	162	222	256							
		20	26	31	37	43	52	59	64	76	80	94	103	116	133	168	203	235	289					
		24	24	28	32	38	43	50	54	62	65	78	90	108	110	138	182	205	238	301				
24	2N@ 12.00	20	18	18	18	18	18	18	18	19	19	21	24	27	30	36	44	47	54	68	78	99	103	131
		24	18	18	18	18	18	18	18	18	19	20	21	22	26	32	34	40	46	55	67	79	93	106
		28	19	19	19	19	19	19	19	19	19	19	20	21	23	28	32	35	41	48	57	69	72	95
	3N@ 8.00	20	16	16	16	16	16	18	20	22	23	26	29	33	36	45	54	62	74	92	105	130	151	175
		24	16	16	16	16	16	16	17	19	21	24	27	29	31	38	47	55	64	78	94	108	117	156
		28	16	16	16	16	17	17	17	18	18	24	26	26	30	35	40	48	55	67	86	97	108	122
	4N@ 6.00	20	16	16	17	19	21	25	27	28	31	36	39	47	50	63	78	100	101	130	161	183	192	246
		24	17	17	17	18	19	22	24	25	28	32	35	38	43	54	65	76	85	107	124	147	168	225
		28	16	16	16	16	17	20	20	21	25	27	30	36	38	44	53	62	74	88	108	126	149	187
	5N@ 4.8	20	16	17	20	22	25	28	31	35	36	43	51	55	62	78	100	105	131	164	196	225	282	
		24	16	16	18	20	21	26	28	29	32	36	41	49	53	65	80	94	104	134	157	186	218	285
		28	16	16	17	19	20	22	25	27	29	32	36	42	46	58	66	82	97	115	138	168	180	231
	6N@ 4.00	20	17	20	23	27	30	33	38	41	44	51	59	69	74	101	109	141	163	192	245	294		
		24	16	17	20	23	26	29	32	34	38	43	53	60	61	76	103	106	124	172	196	232	267	
		28	17	17	20	22	25	28	29	31	33	39	44	49	55	76	84	106	112	129	177	202	240	289
	12N@ 2.00	20	29	38	45	51	59	70	75	84	101	103	122	143	166	196	265	320						
		24	27	31	38	45	53	61	62	72	77	87	105	113	126	175	199	249	288					
		28	25	29	33	40	45	54	56	69	71	79	91	113	114	144	183	215	234	305				
26	2N@ 13.00	20	22	22	22	22	22	22	23	24	24	26	27	29	32	37	45	53	60	68	90	99	112	140
		24	23	23	23	23	23	23	23	23	24	25	25	27	29	32	38	44	51	61	70	83	101	115
		28	23	23	23	23	23	23	23	23	23	24	25	26	27	31	34	39	45	52	62	71	81	103
	3N@ 8.67	20	15	15	16	16	17	19	22	23	25	28	33	36	39	50	57	68	78	99	113	140	151	196
		24	16	16	16	16	16	17	19	21	23	25	28	31	34	40	51	58	67	80	102	113	132	155
		28	16	16	16	16	16	17	17	19	20	25	25	28	29	38	45	48	56	69	81	97	110	136
	4N@ 6.5	20	16	16	18	21	24	27	28	30	33	39	42	50	54	69	82	100	107	140	161	186	213	284
		24	16	16	17	18	20	23	25	27	28	33	37	40	48	60	71	79	101	110	143	166	188	223
		28	16	16	16	17	19	20	20	22	26	29	32	35	39	50	60	69	76	104	112	145	149	204
	5N@ 5.2	20	17	18	21	25	28	31	35	39	40	48	54	62	69	91	100	114	140	172	200	239	275	
		24	16	16	19	21	24	27	28	31	34	38	43	51	55	71	84	103	108	143	166	201	225	310
		28	16	16	17	19	21	23	27	28	29	34	39	43	50	61	80	86	104	118	147	178	200	249
	7N@ 3.71	20	20	24	28	33	36	42	47	54	58	65	78	91	100	119	140	162	192	238	308			
		24	17	20	26	28	31	35	40	44	49	56	64	71	80	103	116	143	166	198	242	293		
		28	17	20	22	27	29	32	35	38	42	50	58	62	70	86	106	114	137	178	212	253	292	
	13N@ 2.00	20	42	50	58	70	86	91	103	109	110	131	152	173	202	252								
		24	35	43	50	62	66	76	88	93	97	112	127	154	166	225	248							
		28	32	40	48	55	64	68	74	90	90	100	115	130	148	177	232	283						
Bearing Depth			7 1/2 in.													10 in.								

Joist Girder weights between the heavy black and blue lines have 7 1/2 inch bearing depths.
Joist Girder weights to the right of the heavy blue line have 10 inch bearing depths. Check with Vulcraft for material availability.

DESIGN GUIDE WEIGHT TABLE FOR JOIST GIRDERS
U. S. CUSTOMARY

Based on a 50ksi maximum yield strength

Girder Span (ft)	Joist Spaces (ft)	Girder Depth (in)	Joist Girder Weight – Pounds Per Linear Foot Load on Each Panel Point																					
		LRFD	6K	7.5K	9K	10.5K	12K	13.5K	15K	16.5K	18K	21K	24K	27K	30K	37.5K	45K	52.5K	60K	75K	90K	105K	120K	150K
		ASD	4K	5K	6K	7K	8K	9K	10K	11K	12K	14K	16K	18K	20K	25K	30K	35K	40K	50K	60K	70K	80K	100K
28	2N@ 14.00	24	29	29	29	29	29	29	29	30	31	31	33	34	37	39	42	49	57	65	77	91	103	129
		28	29	29	30	30	30	30	30	30	30	31	32	34	34	38	40	43	46	58	66	78	93	106
		32	30	30	30	30	30	30	30	30	30	31	32	33	34	37	39	40	44	52	60	68	76	95
	3N@ 9.33	24	16	16	16	16	16	18	21	22	23	26	29	33	36	44	54	61	70	91	105	124	133	174
		28	16	16	16	16	16	16	18	19	21	23	26	29	31	39	47	52	61	77	94	107	115	156
		32	16	16	16	16	17	17	17	18	19	24	24	27	29	36	42	47	54	70	80	97	110	131
	4N@ 7.00	24	16	16	17	19	21	24	27	28	31	35	39	45	50	62	74	91	101	121	143	165	190	244
		28	17	17	17	18	20	23	24	25	28	32	36	39	44	57	64	76	85	109	124	151	170	206
		32	16	16	16	18	19	20	21	22	24	27	31	37	39	46	54	62	74	88	108	126	149	185
	5N@ 5.6	24	16	17	19	22	24	28	31	33	35	41	47	55	62	78	92	105	114	152	176	215	244	
		28	16	16	17	20	21	26	28	29	32	35	40	47	52	64	80	94	104	134	156	186	213	260
		32	16	16	17	19	20	22	26	27	29	32	38	42	46	58	66	82	97	111	136	162	190	232
	6N@ 4.67	24	17	19	21	25	29	32	36	39	43	50	59	66	73	100	109	121	142	191	219	254	314	
		28	16	19	21	22	26	29	32	34	37	44	52	57	60	76	103	105	123	149	194	223	253	
		32	17	17	20	22	24	27	30	31	34	38	45	51	54	71	87	105	108	148	177	201	230	301
	7N@ 4.00	24	18	22	26	31	33	37	43	48	51	59	67	79	84	103	131	144	166	219	261			
		28	17	20	24	26	29	32	36	41	45	53	61	65	74	95	109	125	147	184	224	272	312	
		32	17	20	23	25	27	30	33	37	40	47	55	60	67	83	106	115	127	169	202	240	277	
	14N@ 2.00	24	33	43	51	59	66	79	84	102	103	121	143	155	173	221	281							
		28	30	38	45	53	61	70	75	82	88	106	114	137	149	198	235	274	332					
		32	28	33	40	47	54	63	72	76	79	100	113	118	132	172	206	244	284					
30	2N@ 15.00	24	29	29	29	29	29	29	30	30	31	32	33	35	37	40	46	53	60	72	85	102	103	139
		28	29	29	29	29	29	30	30	30	30	32	32	34	36	38	41	44	49	65	74	86	92	115
		32	30	30	30	30	30	30	30	30	30	31	32	33	34	37	40	41	45	55	66	75	89	106
		36	30	30	30	30	30	30	30	30	30	31	32	32	33	36	38	41	42	51	60	68	76	95
	3N@ 10.00	24	15	16	16	16	18	19	22	24	25	29	31	34	38	48	57	65	74	91	109	130	151	176
		28	16	16	16	16	16	17	20	21	24	25	28	31	33	43	50	58	67	79	94	108	126	156
		32	16	16	16	16	16	17	18	19	21	25	26	29	30	38	45	51	60	69	89	96	110	136
		36	16	17	17	17	17	17	18	20	24	26	27	30	34	42	46	55	70	80	92	99	122	
	4N@ 7.5	24	16	16	17	20	24	26	27	30	32	37	42	47	54	66	78	99	104	140	161	183	210	265
		28	16	16	17	18	21	23	25	27	28	33	37	42	46	56	71	79	93	110	143	156	179	223
		32	16	16	16	18	19	20	21	23	27	29	32	36	41	50	60	69	76	104	112	146	149	202
		36	16	16	17	17	18	19	21	22	24	27	30	35	38	45	54	62	71	87	106	115	147	184
	5N@ 6.00	24	16	17	20	23	26	29	32	34	38	45	53	58	62	78	100	108	131	162	193	231	262	
		28	16	16	19	21	24	27	28	31	34	38	46	49	56	71	79	102	107	143	166	195	224	285
		32	16	16	17	19	21	25	26	28	31	36	39	44	50	64	73	85	104	118	147	177	198	248
		36	16	17	17	19	21	22	25	27	29	31	38	40	44	58	66	76	88	108	127	151	179	220
	6N@ 5.00	24	17	19	24	28	31	34	39	42	47	54	62	69	78	100	109	140	161	190	237	288		
		28	16	19	20	26	28	31	34	37	40	46	52	60	67	84	102	111	143	167	195	222	289	
		32	16	17	20	22	26	28	31	32	35	41	47	53	60	74	87	106	113	148	175	200	237	304
		36	17	18	19	21	24	28	28	30	33	38	44	49	55	67	79	90	108	129	154	180	206	275
	8N@ 3.75	24	21	25	31	36	41	47	50	58	62	73	83	100	102	131	162	188	216	255				
		28	20	23	29	32	37	40	44	49	53	61	72	81	86	111	144	147	175	224	281			
		32	19	22	26	30	32	36	41	45	50	57	65	75	82	105	114	147	159	204	242	308	343	
		36	19	21	24	28	30	35	38	39	43	53	59	69	74	89	111	118	152	185	218	256	314	
	15N@ 2.00	24	40	50	58	66	78	92	101	106	115	142	165	181	196	257	326							
		28	34	41	52	60	68	76	85	103	105	113	137	152	176	216	265	329						
		32	30	39	47	54	62	73	77	83	91	111	117	133	159	195	242	275	325					
		36	29	35	42	49	56	66	72	79	82	103	117	127	142	183	222	260	290					
32	3N@ 10.67	24	15	15	15	17	19	21	23	25	26	31	34	37	42	50	63	72	86	102	123	130	150	197
		28	16	16	16	16	17	19	21	22	24	27	29	32	35	44	51	64	67	87	105	114	132	173
		32	16	16	16	16	16	17	19	21	22	25	27	30	32	39	45	52	60	77	93	107	115	156
		36	16	16	17	17	17	17	18	19	21	25	25	28	30	37	44	51	54	69	79	97	110	131
	4N@ 8.00	24	16	16	18	22	24	26	29	31	34	40	45	53	58	69	89	99	107	139	161	187	222	273
		28	16	16	17	19	22	24	26	27	30	35	38	46	48	62	70	83	101	115	143	165	187	243
		32	17	17	17	18	20	24	25	25	28	32	36	39	46	56	65	73	85	109	124	151	172	203
		36	16	16	18	18	19	20	22	23	26	28	34	37	39	50	57	66	75	88	107	125	149	184
	5N@ 6.4	24	16	19	22	26	29	31	34	38	41	47	54	61	68	91	103	113	140	172	200	237	275	
		28	16	17	19	22	24	27	29	32	35	41	47	54	62	71	92	102	114	143	175	209	233	305
		32	16	16	18	20	22	26	27	30	33	36	42	47	55	64	80	94	103	133	156	187	203	258
		36	16	17	17	19	20	23	25	28	29	35	37	43	48	58	72	82	96	111	137	162	189	230
	6N@ 5.33	24	18	21	25	29	33	36	40	46	49	57	65	73	82	100	119	141	161	214	242	307		
		28	17	19	21	26	28	31	36	39	43	50	59	62	70	92	102	121	142	171	219	249	290	
		32	16	19	20	24	26	28	32	34	37	44	52	57	60	76	103	105	123	149	194	223	253	321
		36	17	17	20	21	25	27	30	32	35	39	46	51	57	74	87	105	108	148	176	200	229	299
	8N@ 4.00	24	23	28	33	39	42	50	57	58	65	77	91	100	108	140	162	188	216	282				
		28	21	26	28	33	37	42	48	51	59	67	75	85	101	111	143	167	192	241	292			
		32	20	23	27	30	34	38	42	46	52	61	69	76	86	109	125	149	176	207	258	304		
		36	19	22	26	29	32	36	39	43	46	54	62	74	76	97	116	129	152	195	241	277	316	
Bearing Depth			7 1/2 in.																10 in.					

Joist Girder weights between the heavy black and blue lines have 7 1/2 inch bearing depths.
Joist Girder weights to the right of the heavy blue line have 10 inch bearing depths. Check with Vulcraft for material availability.

DESIGN GUIDE WEIGHT TABLE FOR JOIST GIRDERS
U. S. CUSTOMARY

Based on a 50ksi maximum yield strength

Girder Span (ft)	Joist Spaces (ft)	Girder Depth (in)	Joist Girder Weight – Pounds Per Linear Foot Load on Each Panel Point																				
		LRFD	6K	7.5K	9K	10.5K	12K	13.5K	15K	16.5K	18K	21K	24K	27K	30K	37.5K	45K	52.5K	60K	75K	90K	105K	120K	150K
		ASD	4K	5K	6K	7K	8K	9K	10K	11K	12K	14K	16K	18K	20K	25K	30K	35K	40K	50K	60K	70K	80K	100K
34	3N@ 11.33	32	18	18	18	19	19	19	20	22	23	26	28	32	35	42	49	58	66	87	91	112	126	156
		36	18	19	19	19	19	19	20	20	22	26	27	29	31	39	45	51	60	73	89	99	115	136
		40	19	19	19	19	19	19	20	20	21	25	27	28	32	37	44	46	54	70	79	92	110	132
	4N@ 8.50	28	16	16	18	20	23	26	27	29	32	36	40	47	54	62	78	91	100	130	152	174	199	243
		32	16	16	17	19	20	24	24	27	30	32	37	42	47	56	71	79	92	108	134	155	177	223
		36	16	17	18	18	19	21	23	26	27	29	33	38	41	50	61	69	76	104	113	146	149	200
		40	16	18	18	18	19	20	21	23	26	28	33	35	39	45	54	62	74	87	106	115	148	182
	5N@ 6.80	28	16	17	21	23	26	29	32	35	38	45	47	54	62	77	99	106	120	153	185	212	248	
		32	16	17	18	21	24	27	30	32	34	39	46	48	55	70	79	101	107	133	156	197	214	267
		36	16	16	17	20	21	25	28	28	33	36	39	47	50	64	73	85	104	119	146	170	198	241
		40	17	17	18	19	21	23	26	29	29	35	38	40	48	58	66	80	96	111	137	151	181	227
	6N@ 5.67	28	17	20	24	28	30	33	36	41	44	54	58	65	73	100	108	130	142	190	220	248	307	
		32	17	19	21	25	28	31	34	37	40	48	52	59	67	83	102	110	123	167	193	224	252	
		36	17	18	20	22	26	28	31	32	36	41	50	53	60	74	86	105	113	148	177	199	228	298
		40	17	18	19	22	24	27	29	30	33	39	42	51	54	67	83	97	108	128	153	187	216	269
36	7N@ 4.86	28	19	23	27	31	34	39	43	47	54	62	70	78	91	105	131	152	175	219	255			
		32	18	20	26	27	31	35	38	42	47	56	64	71	79	102	111	134	155	193	223	268		
		36	17	20	22	27	29	32	36	38	42	50	57	65	69	86	105	118	136	176	203	241	285	
		40	17	20	23	25	28	30	33	36	39	45	53	59	63	79	99	109	122	154	196	225	258	332
	9N@ 3.78	28	25	28	34	39	43	51	58	63	67	78	92	101	109	142	164	194	220	284				
		32	21	26	30	35	40	44	49	56	60	70	80	95	103	124	148	175	198	265	325			
		36	20	25	28	32	36	41	45	50	53	62	72	81	88	113	127	150	178	227	275	330		
		40	19	23	28	30	34	38	43	46	51	59	68	76	84	107	116	142	159	206	250	299		
	3N@ 12.00	28	18	18	18	18	19	21	23	25	27	30	33	40	41	48	60	69	81	94	109	130	151	186
		32	18	18	18	18	18	19	21	23	25	27	30	33	36	44	54	61	71	87	104	112	132	164
		36	18	18	19	19	19	19	20	21	22	26	28	31	34	43	48	55	63	76	93	107	115	156
		40	19	19	19	19	19	19	19	20	22	26	26	29	32	40	44	51	57	69	89	97	110	131
	4N@ 9.00	28	16	16	19	21	23	27	29	31	34	39	45	50	54	69	81	99	104	140	161	183	211	265
		32	16	16	17	20	23	24	26	28	31	35	40	46	48	62	70	83	101	115	143	165	188	230
		36	17	17	17	18	21	24	25	27	28	33	37	40	46	57	65	73	85	109	125	150	172	212
		40	16	18	18	18	19	21	23	23	26	28	32	38	40	50	58	66	76	96	111	126	149	183
	5N@ 7.20	28	16	18	21	25	26	31	34	36	40	45	54	61	68	81	100	114	130	162	196	231	262	
		32	16	17	20	22	24	27	30	34	35	41	46	54	59	70	91	101	112	143	177	199	233	300
		36	16	16	18	21	23	26	28	30	33	37	42	47	55	63	79	93	104	133	156	186	200	258
		40	17	17	17	20	21	24	26	28	31	36	39	43	49	57	73	81	95	111	137	162	188	230
	6N@ 6.00	28	18	20	25	27	33	36	39	42	47	57	62	69	77	99	113	140	160	191	236	282		
		32	17	20	23	25	28	31	35	39	42	48	55	62	70	83	102	121	142	167	199	241	285	
		36	16	18	21	24	26	29	32	36	37	44	52	56	63	80	102	106	123	147	193	214	252	317
		40	17	18	20	22	26	27	30	33	35	41	46	53	58	71	86	105	111	148	177	200	228	296
	7N@ 5.14	28	19	24	28	33	37	40	47	50	54	62	77	82	99	113	140	162	188	225	291			
		32	18	21	26	28	32	37	40	43	49	56	64	71	80	102	116	143	166	196	246	297		
		36	18	20	25	28	31	33	36	41	44	53	57	65	73	94	109	125	147	183	213	256	306	
		40	17	20	24	26	29	31	34	37	41	49	55	62	66	82	106	113	127	167	200	231	274	
	9N@ 4.00	28	24	31	36	41	46	54	57	65	69	82	99	104	113	141	173	205	236	293				
		32	23	27	31	37	40	48	52	59	63	73	84	102	103	133	157	185	215	268				
		36	21	26	29	33	37	41	50	52	56	65	74	85	95	113	146	160	187	236	298			
		40	20	24	27	30	35	39	43	46	51	62	68	76	87	107	121	151	178	207	270	307		
38	3N@ 12.67	32	22	23	23	23	23	24	25	26	26	29	33	36	40	47	57	65	74	91	109	124	142	173
		36	23	23	23	23	23	24	25	26	26	27	28	32	36	43	50	61	67	85	97	112	126	156
		40	23	23	23	23	24	24	24	25	26	29	28	31	33	43	48	55	63	73	89	99	115	145
		44	23	24	24	24	24	24	24	25	26	28	29	29	33	39	44	50	58	70	88	96	110	131
	4N@ 9.50	32	16	16	18	21	23	26	28	30	32	36	41	46	54	62	78	91	100	120	152	175	190	244
		36	16	17	17	19	23	24	26	26	29	34	38	42	47	56	71	79	93	108	134	155	177	223
		40	17	17	18	18	20	23	24	26	28	31	35	38	41	51	61	72	80	104	113	146	149	199
		44	18	18	18	18	19	21	23	24	27	29	34	36	39	48	58	66	74	88	106	121	148	182
	5N@ 7.60	32	16	17	20	23	26	29	32	35	37	44	47	55	62	77	91	105	115	152	177	207	233	
		36	16	17	18	22	24	27	29	31	34	38	46	49	56	71	79	93	107	134	158	184	213	274
		40	16	16	17	20	22	25	28	30	33	37	41	47	50	63	74	93	104	118	147	171	197	239
		44	17	17	18	20	21	23	26	28	30	35	39	42	49	57	69	81	96	111	137	161	188	221
	6N@ 6.33	32	17	20	23	27	31	34	36	39	43	51	58	65	73	99	106	121	142	189	218	251	305	
		36	17	19	21	26	28	32	34	37	40	48	52	59	64	83	102	110	123	167	192	222	260	
		40	17	18	20	23	26	29	32	33	36	42	50	56	61	73	86	105	113	148	176	199	228	298
		44	17	18	20	22	26	28	30	33	34	39	46	51	58	70	82	97	108	127	163	189	210	272
	8N@ 4.75	32	20	26	30	35	39	43	49	55	59	67	79	92	101	121	143	167	191	239	309			
		36	20	24	28	32	36	41	44	50	53	61	69	81	86	106	125	147	175	224	258	325		
		40	20	25	28	31	34	37	43	48	51	58	66	74	82	106	115	139	168	202	240	292	333	
		44	19	23	27	29	32	36	39	43	49	54	60	72	76	98	111	123	153	184	222	272	309	
	10N@ 3.80	32	27	32	38	45	48	55	62	70	78	91	102	107	121	155	191	212	260					
		36	25	30	35	39	47	49	56	64	71	79	93	103	108	145	173	196	214	282				
		40	23	28	33	37	42	48	50	57	64	76	81	95	106	120	150	176	203	264	314			
		44	22	26	31	35	38	44	49	53	58	67	76	83	97	113	139	168	192	239	288			
Bearing Depth			7 1/2 in.															10 in.					

Joist Girder weights between the heavy black and blue lines have 7 1/2 inch bearing depths.
Joist Girder weights to the right of the heavy blue line have 10 inch bearing depths. Check with Vulcraft for material availability.

DESIGN GUIDE WEIGHT TABLE FOR JOIST GIRDERS
U. S. CUSTOMARY

Based on a 50ksi maximum yield strength

Girder Span (ft)	Joist Spaces (ft)	Girder Depth (in)	Joist Girder Weight – Pounds Per Linear Foot Load on Each Panel Point																					
		LRFD	6K	7.5K	9K	10.5K	12K	13.5K	15K	16.5K	18K	21K	24K	27K	30K	37.5K	45K	52.5K	60K	75K	90K	105K	120K	150K
		ASD	4K	5K	6K	7K	8K	9K	10K	11K	12K	14K	16K	18K	20K	25K	30K	35K	40K	50K	60K	70K	80K	100K
40	3N@ 13.33	32	22	23	23	23	24	24	25	26	27	30	34	38	40	51	60	69	81	94	108	124	150	185
		36	23	23	23	23	23	24	25	25	27	27	32	34	39	46	54	61	70	87	104	111	126	164
		40	23	23	23	23	23	23	24	25	27	27	28	32	35	43	49	55	62	84	93	107	125	156
		44	23	23	23	24	24	24	24	26	26	28	28	32	33	42	47	55	63	73	89	99	115	131
		48	23	24	24	24	24	24	24	26	26	29	29	29	32	38	44	51	57	70	80	92	102	131
	4N@ 10.00	32	16	16	19	22	25	26	28	30	33	39	45	50	53	68	77	90	104	129	152	173	202	252
		36	16	17	18	21	25	25	26	29	31	34	40	44	48	62	71	79	93	115	143	166	179	230
		40	17	17	17	19	23	25	26	27	29	32	38	41	46	56	68	77	93	109	119	150	172	212
		44	16	16	18	18	20	21	23	24	28	30	34	37	40	51	57	66	76	104	111	126	150	189
		48	17	17	18	18	19	20	23	25	26	28	32	34	37	49	58	66	74	87	108	116	139	178
	5N@ 8.00	32	16	18	22	25	28	31	34	37	40	46	54	58	65	78	100	106	130	157	188	227	255	
		36	16	17	20	23	25	27	31	34	35	41	46	54	59	71	91	102	107	143	167	196	230	298
		40	16	16	18	21	23	27	28	30	33	37	42	47	53	64	80	93	104	128	159	182	210	262
		44	17	17	17	20	23	24	28	29	31	35	39	46	49	60	73	81	96	116	138	161	186	245
		48	17	17	17	19	23	25	25	28	29	33	37	41	47	57	67	80	93	111	122	152	178	217
	6N@ 6.67	32	17	20	24	28	32	35	39	42	47	54	62	69	77	99	108	140	151	189	220	266		
		36	17	20	23	26	28	31	35	38	41	48	55	62	70	83	102	115	142	167	197	232	275	
		40	17	18	21	25	28	29	32	36	38	44	49	56	64	79	94	105	118	147	185	215	245	313
		44	17	18	21	22	27	29	30	33	36	42	49	53	58	74	86	105	111	148	177	199	227	294
		48	17	18	20	24	25	28	29	31	33	40	44	52	55	72	79	98	108	130	156	180	204	271
	7N@ 5.71	32	19	24	28	32	34	40	45	47	54	62	70	77	91	105	130	152	175	218	255			
		36	18	21	26	28	32	35	40	43	48	56	63	71	79	102	115	143	155	197	232	276		
		40	18	20	25	28	31	33	36	41	45	51	57	65	72	94	108	118	145	184	214	255	300	
		44	18	21	23	27	29	31	34	37	41	50	58	63	67	82	106	113	127	167	199	237	272	
		48	18	22	24	27	30	33	37	39	42	48	57	63	71	81	99	114	125	169	195	234	267	
	8N@ 5.00	32	21	27	31	36	39	47	50	58	62	70	83	100	101	121	152	175	197	241				
		36	21	25	29	32	37	40	48	51	56	64	72	84	93	111	144	156	182	222	277			
		40	20	23	27	30	35	38	41	46	51	61	69	76	86	105	119	148	171	203	257	294		
		44	20	24	29	30	34	38	41	45	50	58	66	75	78	98	113	129	153	193	240	278	320	
		48	19	24	26	29	32	35	40	43	46	55	60	72	76	90	111	118	144	183	218	261	295	
	10N@ 4.00	32	27	33	40	43	51	58	63	70	78	92	103	110	122	168	190	218	246					
		36	27	30	35	41	48	55	62	64	72	79	94	107	116	145	181	199	240	306				
		40	25	28	33	39	43	50	56	57	65	74	86	95	109	134	160	186	212	277				
		44	23	28	31	37	40	48	51	57	59	74	81	88	98	120	150	175	190	255	302			
		48	22	26	29	34	38	42	50	54	59	67	76	83	98	114	140	157	182	230	277	324		
42	3N@ 14.00	32	29	29	29	30	31	31	32	33	34	35	38	40	45	53	60	69	81	94	118	140	160	185
		36	29	29	30	30	30	31	32	34	33	35	36	38	40	47	57	64	70	87	109	122	141	173
		40	30	30	30	30	30	30	31	34	34	34	35	37	39	46	53	61	71	85	97	112	126	156
		44	30	30	30	30	30	30	32	32	33	35	35	36	37	43	48	56	63	73	89	99	115	146
		48	30	30	30	30	31	31	32	32	33	35	35	36	39	43	48	53	61	74	88	99	110	132
	4N@ 10.50	32	16	17	20	23	25	28	30	33	35	42	45	50	57	68	89	99	104	140	161	186	214	274
		36	16	16	18	21	23	25	28	30	33	37	44	46	52	66	75	91	101	115	143	175	191	240
		40	17	17	18	21	22	24	26	28	30	34	38	45	47	59	68	79	94	109	134	159	177	214
		44	17	17	18	19	21	25	25	27	29	32	36	42	46	54	65	74	82	106	120	138	164	202
		48	18	18	18	18	20	25	27	25	28	31	35	39	43	50	63	71	81	98	114	139	153	192
	5N@ 8.40	32	17	20	23	26	28	33	36	39	44	47	54	61	68	90	103	113	130	172	197	225	256	
		36	16	17	21	23	26	28	32	34	37	44	48	54	62	74	91	105	115	152	177	207	233	
		40	16	18	20	22	24	27	29	32	34	40	45	52	55	67	79	93	107	133	156	186	210	266
		44	16	18	19	21	25	26	28	30	32	38	41	47	53	64	77	93	104	119	148	171	200	238
		48	17	18	18	20	24	24	27	29	30	36	39	43	49	57	70	81	96	111	137	162	187	220
	6N@ 7.00	32	18	21	26	29	33	37	40	45	47	57	65	73	81	99	119	140	160	190	236	289		
		36	17	20	24	27	30	34	36	39	43	51	58	62	70	91	106	121	142	177	209	240	293	
		40	17	19	21	26	28	32	34	36	40	47	55	59	64	79	103	109	123	167	192	222	253	
		44	17	18	21	24	26	29	32	34	36	43	50	57	60	76	95	105	113	148	176	202	227	303
		48	17	18	21	24	26	29	30	33	35	41	46	52	58	70	83	106	108	139	163	188	208	270
	7N@ 6.00	32	20	24	29	34	37	42	47	53	54	68	77	90	99	113	140	162	187	226	289			
		36	20	23	27	30	35	38	41	46	51	59	70	78	83	102	122	142	166	205	248	292		
		40	18	22	25	28	32	35	39	42	47	56	63	71	79	95	109	134	147	182	222	272	303	
		44	18	21	24	27	30	32	36	40	43	51	57	65	73	87	106	119	137	176	202	246	283	
		48	18	20	24	26	29	32	34	37	41	47	52	59	67	83	98	113	122	164	191	220	255	
	8N@ 5.25	32	22	28	33	38	43	47	54	58	65	77	83	100	105	140	163	188	216	268				
		36	20	26	29	34	40	43	49	55	59	67	79	84	101	116	143	167	190	231	290			
		40	20	24	28	33	36	41	45	50	53	61	69	81	86	107	126	151	175	215	264	326		
		44	21	23	28	31	34	37	43	47	52	58	66	79	83	107	116	141	157	201	239	291	333	
		48	21	25	28	29	32	35	39	44	48	56	64	69	78	100	111	130	156	182	214	278	315	
	11N@ 3.82	32	31	37	45	53	61	69	77	82	91	104	114	130	151	189	218	267						
		36	27	35	41	48	55	62	70	72	79	92	106	115	132	166	197	232	270					
		40	27	32	37	42	49	56	64	65	73	84	103	108	117	149	182	209	243	310				
		44	25	31	35	40	48	51	58	65	66	81	95	106	111	139	167	190	218	281				
		48	24	29	34	38	45	50	54	60	67	76	84	98	108	122	154	180	205	259	318			
Bearing Depth			7 1/2 in.														10 in.							

Joist Girder weights between the heavy black and blue lines have 7 1/2 inch bearing depths.
Joist Girder weights to the right of the heavy blue line have 10 inch bearing depths. Check with Vulcraft for material availability.

DESIGN GUIDE WEIGHT TABLE FOR JOIST GIRDERS
U. S. CUSTOMARY

Based on a 50ksi maximum yield strength

Girder Span (ft)	Joist Spaces (ft)	Girder Depth (in)	Joist Girder Weight – Pounds Per Linear Foot Load on Each Panel Point																				
		LRFD	6K	7.5K	9K	10.5K	12K	13.5K	15K	16.5K	18K	21K	24K	27K	30K	37.5K	45K	52.5K	60K	75K	90K	105K	120K	150K
		ASD	4K	5K	6K	7K	8K	9K	10K	11K	12K	14K	16K	18K	20K	25K	30K	35K	40K	50K	60K	70K	80K	100K
45	3N@ 15.00	36	30	30	30	30	31	31	32	34	35	36	38	39	44	52	60	69	81	95	120	134	151	187
		40	30	30	30	30	31	31	32	33	35	35	37	38	39	51	59	62	70	88	110	122	141	166
		44	30	30	30	31	31	31	32	33	34	34	36	37	38	46	53	59	67	85	98	113	126	157
		48	30	30	30	31	31	31	32	32	33	36	36	38	37	41	48	58	63	82	90	101	117	148
		54	30	30	30	32	32	32	32	32	33	36	36	37	39	41	48	53	60	71	89	97	104	132
	4N@ 11.25	36	18	19	20	23	25	27	29	31	34	42	43	50	57	65	77	90	104	130	152	174	199	252
		40	19	19	20	21	24	25	28	30	32	37	43	46	51	65	75	87	101	115	143	165	178	230
		44	19	19	20	21	23	26	26	28	30	34	40	44	47	59	68	76	93	109	134	156	178	211
		48	19	20	20	21	22	25	25	26	29	32	35	40	42	54	64	73	81	104	114	136	151	198
		54	20	20	20	21	22	24	25	26	27	30	33	38	41	50	58	66	74	97	108	116	140	176
	5N@ 9.00	36	16	18	23	25	28	30	33	36	39	46	54	58	65	78	99	110	131	152	194	228	254	
		40	16	18	21	23	26	28	31	34	37	44	46	54	58	75	91	105	112	143	176	206	231	295
		44	16	17	20	23	24	27	29	32	34	39	45	48	56	67	79	94	107	133	156	182	209	265
		48	17	18	19	24	25	26	28	30	32	37	41	46	53	64	78	89	96	118	148	162	186	238
		54	17	18	18	21	24	26	26	29	31	33	40	43	47	58	70	79	92	112	131	153	166	217
	6N@ 7.50	36	17	22	24	29	32	35	39	43	47	54	62	69	78	99	109	140	151	189	217	261		
		40	17	20	24	27	30	33	35	38	42	49	55	62	71	92	102	116	142	168	196	246	281	
		44	17	19	23	26	28	31	33	36	39	47	52	56	64	80	103	109	123	159	192	222	250	
		48	17	19	22	24	27	29	31	34	37	43	50	57	61	74	87	105	113	148	175	199	227	295
		54	17	18	21	24	25	28	30	33	35	38	45	52	55	68	83	98	108	128	155	178	202	266
	7N@ 6.43	36	20	24	28	32	36	40	46	47	54	62	70	77	91	105	130	152	175	217	255			
		40	19	22	27	30	34	38	41	46	49	56	63	71	79	102	116	143	155	196	231	290		
		44	18	22	25	28	31	36	39	42	47	56	63	65	72	94	109	123	147	182	213	257	299	
		48	18	21	24	27	29	33	37	40	43	50	57	65	73	82	105	119	136	175	201	238	278	
		54	24	24	26	30	32	35	39	41	45	49	57	63	72	83	100	114	125	165	195	231	263	
	9N@ 5.00	36	25	30	35	39	47	54	58	63	70	78	92	101	109	141	164	194	226	282				
		40	22	28	32	37	42	48	52	56	64	72	84	93	103	123	156	179	197	250				
		44	23	28	31	36	39	45	50	53	57	66	76	86	130	113	146	175	187	244	295			
		48	22	26	29	34	37	41	46	51	54	63	74	81	88	109	129	152	177	226	269	313		
		54	21	24	28	31	35	39	43	46	51	60	69	76	84	108	116	144	159	193	243	280	321	
	12N@ 3.75	36	32	39	48	55	62	70	78	83	100	106	121	142	155	191	225	272						
		40	30	35	42	49	56	64	71	79	84	103	108	123	145	171	198	246	294					
		44	28	33	40	48	53	57	65	74	81	95	105	111	125	163	196	216	264					
		48	27	31	37	43	52	58	63	68	75	83	97	108	116	153	179	201	240	301				
		54	25	30	36	40	47	52	58	62	73	79	86	101	112	133	158	184	218	274	333			
48	4N@ 12.00	36	18	19	21	24	26	29	31	34	37	43	48	56	57	73	89	102	109	139	171	195	221	273
		40	19	19	20	22	24	27	29	32	35	41	44	49	57	65	77	91	104	130	152	174	200	253
		44	19	19	20	21	25	27	29	30	32	36	43	45	50	63	75	87	93	113	134	155	177	231
		48	19	20	20	20	24	27	27	30	31	33	40	44	46	60	68	77	89	109	129	157	172	212
		54	20	20	21	21	24	25	26	26	29	32	37	41	43	49	61	70	79	97	112	128	149	188
	5N@ 9.60	36	17	21	24	27	30	33	36	39	44	50	57	64	68	90	103	113	130	171	197	228	266	
		40	17	19	24	25	27	31	33	37	39	44	51	57	65	77	91	106	125	153	177	206	234	
		44	17	18	23	25	26	29	31	34	36	43	47	52	59	71	87	101	107	133	156	195	222	278
		48	17	17	22	24	24	27	30	32	35	39	45	47	53	67	78	90	108	128	157	184	207	266
		54	18	18	21	22	24	26	28	30	32	37	41	46	49	61	70	81	96	116	137	163	185	229
	6N@ 8.00	36	18	23	26	30	34	37	40	45	50	61	68	76	81	99	119	140	160	201	236	288		
		40	17	22	24	27	32	35	38	41	46	54	62	69	77	92	106	130	143	176	218	250	292	
		44	17	20	24	27	30	33	36	39	42	48	55	63	71	84	103	111	132	168	195	231	265	
		48	17	20	24	25	28	31	34	36	39	47	50	57	64	80	94	108	118	148	182	213	251	313
		54	17	20	22	24	27	29	32	35	38	40	49	52	58	74	83	106	111	139	163	195	216	279
	8N@ 6.00	36	24	28	33	39	43	50	54	61	65	77	91	100	105	140	163	188	216	278				
		40	21	27	31	35	40	46	49	55	59	71	79	92	101	116	143	167	191	246	300			
		44	21	27	29	33	37	41	47	50	56	64	72	81	94	109	135	159	174	223	280			
		48	21	24	29	32	36	39	43	49	51	61	67	76	82	107	120	150	175	203	249	301		
		54	23	26	28	33	37	40	43	49	51	59	67	75	81	98	114	130	154	191	229	268	314	
	9N@ 5.33	36	27	31	37	42	47	54	61	69	70	91	99	105	114	151	174	206	237					
		40	24	29	35	38	43	49	55	63	67	78	92	101	107	142	165	191	219	266				
		44	25	28	33	36	42	48	52	57	64	73	80	94	104	118	147	175	199	235	284			
		48	23	28	31	35	40	43	49	53	57	66	74	82	96	111	138	161	186	235	284			
		54	23	26	29	33	37	41	45	50	52	60	68	76	84	108	122	153	165	204	254	301		
	12N@ 4.00	36	34	41	50	58	68	76	82	91	100	109	130	142	164	192	243	294						
		40	32	38	46	55	62	70	74	79	92	102	116	132	144	180	219	258	301					
		44	30	35	42	50	56	64	71	73	81	103	108	117	134	173	198	239	276	288				
		48	29	34	40	46	51	57	66	72	75	86	105	111	120	151	187	215	248	318				
		54	27	32	38	42	51	54	61	68	73	84	98	108	114	141	167	201	227	288				
Bearing Depth			7 1/2 in.														10 in.							

Joist Girder weights between the heavy black and blue lines have 7 1/2 inch bearing depths.
Joist Girder weights to the right of the heavy blue line have 10 inch bearing depths. Check with Vulcraft for material availability.

DESIGN GUIDE WEIGHT TABLE FOR JOIST GIRDERS
U. S. CUSTOMARY

Based on a 50ksi maximum yield strength

Girder Span (ft)	Joist Spaces (ft)	Girder Depth (in)	Joist Girder Weight – Pounds Per Linear Foot Load on Each Panel Point																					
		LRFD	6K	7.5K	9K	10.5K	12K	13.5K	15K	16.5K	18K	21K	24K	27K	30K	37.5K	45K	52.5K	60K	75K	90K	105K	120K	150K
		ASD	4K	5K	6K	7K	8K	9K	10K	11K	12K	14K	16K	18K	20K	25K	30K	35K	40K	50K	60K	70K	80K	100K
50	4N@ 12.50	40	23	24	24	27	27	28	31	33	36	42	44	50	56	65	85	90	104	130	152	173	199	252
		44	23	24	24	26	28	28	29	31	34	38	43	49	51	66	74	87	104	115	153	174	180	230
		48	23	24	24	26	28	28	29	30	32	36	42	44	50	60	68	79	93	108	133	156	178	213
		54	27	27	27	28	28	28	28	30	31	33	38	42	45	55	62	73	82	106	112	137	159	197
		60	27	28	28	28	28	29	29	30	31	32	36	40	43	51	59	69	76	97	113	122	138	178
	5N@ 10.00	40	17	21	24	25	29	32	35	38	42	46	54	58	65	86	100	110	125	152	184	219	253	
		44	16	19	23	24	28	30	33	36	39	44	50	54	58	75	91	105	113	152	177	205	230	294
		48	17	19	22	25	25	29	31	33	36	40	46	53	59	68	88	94	107	134	159	183	209	269
		54	18	18	21	24	26	27	30	31	33	38	42	46	52	61	78	90	96	117	138	162	184	238
		60	18	20	20	22	25	27	28	31	31	35	41	46	48	62	70	79	93	112	133	163	166	217
	6N@ 8.33	40	18	22	26	29	32	36	41	46	47	54	62	70	78	100	109	131	151	188	226	260		
		44	17	22	24	27	30	34	37	40	46	49	55	63	71	92	106	116	142	168	205	246	281	
		48	17	22	23	26	28	32	35	38	39	47	56	63	65	80	103	109	123	159	191	222	258	
		54	18	20	23	25	29	29	32	35	37	43	49	57	58	73	87	105	112	148	174	197	226	293
		60	18	21	22	25	27	31	31	33	35	41	45	51	59	68	83	98	109	129	155	178	205	265
	8N@ 6.25	40	23	27	31	37	41	48	54	55	62	71	83	92	102	122	153	176	195	248				
		44	22	27	31	34	39	44	49	52	56	65	75	84	102	111	144	167	182	222	288			
		48	22	25	29	33	37	40	45	50	53	61	73	81	86	107	126	149	175	214	263	310		
		54	25	26	31	34	37	41	46	48	51	58	70	76	83	106	114	141	163	193	239	283	315	
		60	24	25	28	32	35	39	42	47	49	57	64	72	77	99	115	125	146	178	215	258	291	
	10N@ 5.00	40	28	33	41	46	55	62	66	74	78	92	105	115	131	156	193	229	267					
		44	27	32	37	44	49	56	63	67	72	88	102	107	116	155	180	208	239	302				
		48	27	32	35	41	48	54	57	64	68	80	94	103	109	135	160	186	214	274				
		54	26	29	33	40	43	50	55	58	62	74	82	96	106	121	152	173	188	251	306			
		60	25	28	32	38	41	45	51	54	58	68	77	84	98	114	142	167	180	225	275	317		
	13N@ 3.85	40	35	41	51	59	67	74	83	92	102	111	132	144	169	196	252	303						
		44	32	39	48	56	61	69	75	85	95	105	117	134	148	194	228	260	313					
		48	30	36	44	51	57	66	74	77	87	105	111	120	138	174	200	248	288					
		54	29	34	40	48	53	60	68	74	78	90	108	114	125	157	191	216	256	326				
		60	28	33	40	45	50	57	64	71	73	83	94	113	115	148	174	216	235	297				
55	5N@ 11.00	44	19	22	25	27	30	32	35	38	43	49	54	61	66	85	95	111	125	153	180	219	253	
		48	19	21	24	25	29	30	33	36	39	45	50	58	62	75	91	106	112	153	177	205	230	
		54	20	21	23	25	26	29	31	34	36	44	46	52	60	67	88	94	108	128	158	182	207	265
		60	20	22	22	24	27	27	31	32	34	39	45	47	53	64	77	90	97	116	137	162	185	237
		66	21	22	23	24	26	28	29	32	33	37	42	46	49	62	71	80	93	112	133	164	176	217
	6N@ 9.17	44	18	23	26	29	33	37	40	46	47	54	62	70	77	100	114	131	151	188	226	261		
		48	18	23	24	29	31	34	37	42	46	52	59	66	71	92	106	116	143	177	205	246	279	
		54	19	22	24	27	30	33	35	39	41	47	56	60	65	80	95	109	119	160	181	211	251	
		60	19	20	23	25	30	31	34	37	40	44	50	58	61	77	96	105	112	149	174	197	226	279
		66	20	20	23	26	29	32	32	35	37	41	49	52	59	72	84	99	110	130	156	187	205	269
	7N@ 7.86	44	22	25	28	33	36	41	46	51	54	62	71	78	91	105	131	153	176	216	263			
		48	21	24	28	31	34	39	45	46	52	59	68	77	79	106	117	143	158	205	237	291		
		54	19	24	26	29	32	36	39	43	48	57	64	69	78	95	109	129	148	182	213	259	301	
		60	20	23	25	29	31	34	37	41	43	50	59	67	70	84	406	113	138	166	199	235	277	
		66	20	23	25	29	32	33	37	38	43	50	54	60	68	82	100	114	124	157	194	219	261	317
	9N@ 6.11	44	25	30	35	41	46	54	58	63	70	78	92	101	110	143	166	195	228	282				
		48	25	28	33	39	43	49	55	60	64	72	84	102	108	134	157	182	205	266				
		54	25	28	33	38	42	46	51	57	58	69	79	87	97	114	148	164	187	243	282			
		60	24	28	33	37	40	43	48	50	58	67	79	83	89	108	124	154	174	202	264	309		
		66	24	27	31	35	39	42	45	50	52	61	70	77	85	101	117	145	159	194	242	286	319	
	11N@ 5.00	44	31	37	46	52	58	66	70	78	91	101	107	131	142	179	205	253	297					
		48	29	34	41	47	55	63	67	72	79	93	106	116	113	158	195	231	269					
		54	28	33	39	46	49	57	62	69	73	81	96	109	116	150	181	199	241	302				
		60	26	32	37	41	48	51	59	64	68	80	84	98	112	140	166	189	214	269				
		66	27	31	36	39	46	50	55	62	65	74	84	100	102	124	147	170	194	261	293			
	14N@ 3.93	44	39	46	55	63	71	79	92	102	107	121	144	157	179	218	269							
		48	36	43	50	63	71	77	80	94	104	112	134	148	172	206	254	302						
		54	34	41	49	57	66	71	75	83	97	107	120	138	152	187	215	263	307					
		60	31	39	46	52	61	68	77	78	85	101	114	123	142	168	202	241	284					
		66	32	38	44	50	57	63	71	75	80	96	113	119	130	163	197	223	262	321				
Bearing Depth			7 1/2 in.													10 in.								

Joist Girder weights between the heavy black and blue lines have 7 1/2 inch bearing depths.
Joist Girder weights to the right of the heavy blue line have 10 inch bearing depths. Check with Vulcraft for material availability.

DESIGN GUIDE WEIGHT TABLE FOR JOIST GIRDERS
U. S. CUSTOMARY

Based on a 50ksi maximum yield strength

Girder Span (ft)	Joist Spaces (ft)	Girder Depth (in)	Joist Girder Weight – Pounds Per Linear Foot Load on Each Panel Point																				
		LRFD	6K	7.5K	9K	10.5K	12K	13.5K	15K	16.5K	18K	21K	24K	27K	30K	37.5K	45K	52.5K	60K	75K	90K	105K	120K	150K
		ASD	4K	5K	6K	7K	8K	9K	10K	11K	12K	14K	16K	18K	20K	25K	30K	35K	40K	50K	60K	70K	80K	100K
60	5N@ 12.00	48	21	23	26	28	31	34	37	42	43	50	55	62	66	85	96	111	125	153	189	218	252	
		54	21	21	24	27	30	32	35	38	42	44	51	56	62	75	88	106	112	144	168	204	221	281
		60	21	22	23	26	28	30	33	35	38	44	46	51	57	68	86	95	108	128	158	182	208	256
		66	22	22	23	25	28	29	33	34	36	40	46	47	53	65	78	91	97	117	139	162	188	228
		72	22	23	23	24	27	29	31	34	35	38	44	47	52	62	72	81	93	113	135	164	177	217
	6N@ 10.00	48	21	23	26	31	34	38	40	46	47	58	66	70	77	100	114	131	152	188	227	262		
		54	19	23	25	29	32	35	38	41	45	53	59	67	71	92	106	117	119	169	204	229	269	
		60	19	22	26	28	31	34	36	39	42	48	55	61	68	81	95	110	134	160	181	209	242	
		66	20	22	25	27	30	32	34	67	41	47	50	58	62	77	96	106	112	140	175	198	216	278
		72	20	21	24	27	29	32	33	35	38	43	50	52	60	72	84	99	114	142	166	188	206	266
	8N@ 7.50	48	24	28	32	38	41	48	54	55	62	70	78	92	101	121	152	176	192	241				
		54	23	26	31	35	39	43	47	55	56	64	72	81	94	109	134	158	180	221	268			
		60	23	26	29	32	38	41	44	49	52	59	66	76	83	106	120	149	163	199	239	290		
		66	29	31	34	36	40	46	48	50	56	64	72	76	82	101	116	142	165	191	230	280	313	
		72	30	31	33	34	38	43	47	49	51	59	69	74	83	102	118	126	147	190	228	255	191	
	10N@ 6.00	48	30	36	43	50	58	65	66	75	78	92	106	116	132	157	193	229	265					
		54	29	34	40	46	51	59	60	68	76	88	95	107	144	147	180	205	232	296				
		60	27	33	38	41	47	53	61	61	70	79	90	97	110	136	162	183	210	272				
		66	27	32	36	40	46	49	55	62	64	75	81	97	99	120	143	165	190	254	296			
		72	27	32	35	39	43	48	53	58	61	73	77	86	100	116	137	169	191	225	283			
	12N@ 5.00	48	35	41	49	55	63	71	79	92	93	107	116	142	156	191	229	266						
		54	33	39	46	50	57	65	73	80	81	104	109	118	135	172	197	238	274					
		60	32	37	41	50	56	59	67	74	79	96	107	112	121	163	187	219	247	316				
		66	31	36	40	47	53	60	61	68	76	85	99	110	115	145	177	201	228	288				
		72	30	35	40	44	52	54	63	64	75	80	89	104	114	130	160	194	219	273	319			
	15N@ 4.00	48	39	49	62	70	78	92	101	106	110	132	155	167	189	228	289							
		54	37	47	56	64	73	81	94	95	105	118	135	158	171	208	254	298						
		60	35	42	51	59	68	76	83	88	98	112	122	141	164	197	229	276	307					
		66	36	44	54	57	65	73	80	88	94	113	118	130	158	193	221	261	294					
		72	36	43	49	57	67	75	77	84	91	107	121	126	143	178	219	240	283					
65	6N@ 10.83	54	22	25	28	31	34	38	43	45	47	55	66	69	75	92	107	132	152	177	207	250	288	
		60	22	24	26	31	32	36	38	42	46	53	60	67	71	92	107	116	133	169	195	231	262	
		66	22	24	26	29	31	34	36	40	43	49	54	61	68	80	96	110	119	159	184	209	236	
		72	23	24	26	29	30	33	35	39	43	47	50	56	63	75	92	107	113	141	166	196	218	276
	8N@ 8.13	54	24	28	33	38	42	47	52	55	63	70	78	92	101	116	143	166	192	229	284			
		60	23	26	32	36	39	43	48	50	57	65	72	80	94	109	135	158	180	210	259			
		66	32	34	41	43	44	48	53	55	61	68	73	81	93	114	133	151	167	212	246	296		
		72	32	34	34	42	45	47	49	54	57	69	74	82	83	106	121	143	167	194	241	277		
	10N@ 6.50	54	31	37	44	50	56	63	67	75	76	92	107	113	127	156	182	220	243					
		60	30	35	41	46	52	58	64	68	77	88	95	109	115	136	180	196	222	283				
		66	28	34	39	44	47	54	61	65	70	82	91	98	112	132	163	184	210	263				
		72	28	34	37	41	47	50	56	63	63	72	81	94	100	120	143	168	193	247	295			
	11N@ 5.91	54	32	39	45	52	59	66	71	77	87	101	107	126	133	176	205	230	264					
		60	32	36	45	48	54	61	69	73	78	94	108	110	118	160	181	208	243					
		66	30	36	41	46	50	56	62	70	71	83	97	111	113	141	166	200	215	287				
		72	29	34	39	43	50	55	60	65	73	81	93	100	114	167	166	187	214	257				
	13N@ 5.00	54	36	42	50	57	65	72	80	92	102	108	123	144	158	192	229	269						
		60	34	40	49	57	61	70	74	81	94	105	111	125	148	182	209	252	286					
		66	33	38	45	52	60	67	72	75	83	99	109	116	129	167	199	234	263					
		72	32	38	43	51	55	62	70	77	78	88	110	116	120	158	182	210	253	309				
Bearing Depth			7 1/2 in.													10 in.								

Joist Girder weights between the heavy black and blue lines have 7 1/2 inch bearing depths.
Joist Girder weights to the right of the heavy blue line have 10 inch bearing depths. Check with Vulcraft for material availability.

DESIGN GUIDE WEIGHT TABLE FOR JOIST GIRDERS

Based on a 50ksi maximum yield strength

U. S. CUSTOMARY

Girder Span (ft)	Joist Spaces (ft)	Girder Depth (in)	Joist Girder Weight – Pounds Per Linear Foot Load on Each Panel Point																				
		LRFD	6K	7.5K	9K	10.5K	12K	13.5K	15K	16.5K	18K	21K	24K	27K	30K	37.5K	45K	52.5K	60K	75K	90K	105K	120K	150K
		ASD	4K	5K	6K	7K	8K	9K	10K	11K	12K	14K	16K	18K	20K	25K	30K	35K	40K	50K	60K	70K	80K	100K
70	7N@ 10.00	54	24	28	32	36	40	44	50	54	58	65	73	86	91	111	131	153	175	226	263			
		60	23	26	31	33	38	44	46	51	53	63	67	75	87	106	126	153	165	204	242	284		
		66	23	27	31	32	36	39	45	47	52	59	67	71	78	94	114	135	156	184	222	260		
		72	23	26	29	33	35	39	42	47	48	55	62	70	78	96	111	121	140	183	211	145	286	
		84	26	28	30	32	35	37	40	44	47	51	59	66	71	83	102	117	125	170	192	220	254	313
	9N@ 7.78	54	27	33	37	44	48	54	61	66	70	90	100	105	114	151	174	202	225	276				
		60	25	31	35	40	47	49	56	64	67	76	93	102	107	134	156	180	205	256				
		66	25	31	35	40	47	49	56	62	69	74	82	96	106	121	149	174	200	244	300			
		72	25	31	35	40	46	49	56	57	63	72	81	93	99	115	141	163	185	216	273			
		84	25	31	35	40	43	49	51	53	58	67	76	80	89	104	119	145	171	195	234	287	317	
	11N@ 6.36	54	33	43	50	58	66	67	75	86	92	106	115	132	153	177	217	250	258					
		60	32	40	46	51	59	67	68	76	87	94	108	118	134	167	205	231	236					
		66	32	38	44	47	55	61	68	40	78	91	97	110	120	160	183	207	221	290				
		72	31	36	41	47	54	57	63	72	73	83	98	112	114	142	166	191	196	256	300			
		84	31	35	39	45	50	53	58	68	68	76	87	99	106	126	149	172						
	12N@ 5.83	54	36	45	52	59	67	75	78	92	101	107	132	142	154	192	229	268	287					
		60	34	41	48	56	60	68	77	80	93	107	115	133	145	180	205	245	267					
		66	32	39	47	50	58	65	70	78	82	96	110	120	136	163	198	224	246	304				
		72	33	38	44	50	57	63	69	73	71	94	108	117	124	156	188	214						
		84	31	37	42	47	53	55	65	69	80	86	91	106	119	142	170	196	221	277	318			
	14N@ 5.00	54	40	48	58	66	75	90	92	105	106	131	152	164	177	225	266							
		60	38	46	56	64	71	79	92	93	104	117	133	155	169	205	244	288						
		66	36	43	50	58	65	74	81	94	96	110	120	136	160	184	233	267						
		72	36	42	51	58	65	72	76	84	95	110	115	126	145	189	223	251	285					
		84	34	43	47	54	62	66	74	78	83	101	108	122	134	166	199	234	262	320				
80	8N@ 10.00	60	29	32	38	43	47	52	58	65	66	78	91	100	105	131	153	189	205	253				
		66	29	32	36	40	46	48	53	59	63	71	79	93	105	126	154	177	192	233	284			
		72	30	32	34	38	43	47	79	54	61	69	78	89	95	115	136	159	182	260	258			
		84	30	32	34	38	43	47	48	54	61	69	78	89	95	115	134	157	179	217	264			
		96	30	32	34	38	43	47	49	54	61	69	78	89	95	115	126	141	163	199	225	272	301	
	10N@ 8.00	60	32	37	42	49	55	62	70	78	78	100	105	115	132	164	191	226	252					
		66	35	42	46	55	61	64	72	77	86	98	109	114	129	169	194	219	250					
		72	34	38	46	51	57	64	65	74	78	91	101	110	126	159	183	207	235					
		84	34	37	46	48	53	59	61	67	72	82	95	104	113	135	166	185	212	256				
		96	35	36	42	48	50	55	58	64	72	78	86	98	104	125	143	171	192	239	281			
	13N@ 6.15	60	40	47	59	66	71	78	92	101	106	116	143	155	175	206	252							
		66	38	47	54	60	68	77	80	94	103	109	134	145	157	195	231	261						
		72	37	44	50	59	67	71	79	83	96	111	120	137	152	186	213	253	298					
		84	36	43	50	54	59	67	75	79	84	101	112	119	128	170	193	229	255					
		96	37	42	47	53	57	66	72	81	79	94	109	118	124	155	177	201	235	294				
	16N@ 5.00	60	47	55	67	78	92	101	107	115	132	153	175	192	206	252								
		66	44	55	65	72	80	94	104	109	117	134	158	180	194	232	287							
		72	43	51	59	70	79	83	97	107	111	121	149	162	185	225	268							
		84	42	49	57	64	74	81	90	104	106	120	131	152	174	207	253	287						
		96	44	48	58	64	70	81	86	92	97	114	128	140	159	196	231	268	298					
90	9N@ 10.00	72	38	40	44	47	52	57	61	68	76	88	94	108	115	145	178	205	228	278				
		84	38	40	44	47	52	57	61	69	73	82	94	104	114	134	162	187	212	258				
		96	38	40	44	47	52	57	61	67	71	77	85	98	108	125	139	170	190	221	278			
		108	38	40	44	47	52	57	61	67	70	75	80	89	99	114	129	152	176	205	247	286		
	11N@ 8.18	72	41	46	51	61	64	73	78	89	94	108	115	131	146	181	216	246						
		84	41	45	47	53	61	67	72	78	90	94	113	120	133	161	190	220	250					
		96	44	45	47	50	56	64	70	72	80	94	98	107	123	146	180	196	235	286				
		108	45	46	48	51	57	60	66	75	76	84	98	104	113	140	164	186	204	262				
	15N@ 6.00	72	45	55	61	72	80	94	103	109	114	134	156	179	184	233	285							
		84	47	50	58	65	73	81	93	98	112	121	140	163	166	210	242	295						
		96	48	50	57	64	71	81	87	92	106	121	128	144	163	199	232	261	302					
		108	49	53	57	62	70	75	83	93	97	113	126	134	152	182	210	249	277					
	18N@ 5.00	72	49	62	73	80	94	108	115	128	135	157	181	205	229	280								
		84	49	62	74	82	91	107	117	122	130	149	174	195	210	256	306							
		96	49	60	69	77	86	95	111	121	126	139	156	181	199	233	285							
		108	49	61	66	74	87	92	101	115	118	132	145	165	184	223	267	298						
Bearing Depth			7 1/2 in.											10 in.										

Joist Girder weights between the heavy black and blue lines have 7 1/2 inch bearing depths.
Joist Girder weights to the right of the heavy blue line have 10 inch bearing depths. Check with Vulcraft for material availability.

DESIGN GUIDE WEIGHT TABLE FOR JOIST GIRDERS

Based on a 50ksi maximum yield strength

U. S. CUSTOMARY

Girder Span (ft)	Joist Spaces (ft)	Girder Depth (in)	Joist Girder Weight – Pounds Per Linear Foot																				
			Load on Each Panel Point																				
		LRFD	6K	7.5K	9K	10.5K	12K	13.5K	15K	16.5K	18K	21K	24K	27K	30K	37.5K	45K	52.5K	60K	75K	90K	105K	120K	150K
		ASD	4K	5K	6K	7K	8K	9K	10K	11K	12K	14K	16K	18K	20K	25K	30K	35K	40K	50K	60K	70K	80K	100K
100	10N@ 10.00	84	56	57	58	62	64	72	76	88	90	103	118	129	142	172	200	225	257					
		96	58	58	59	61	64	67	70	78	88	94	106	120	131	152	180	204	228					
		108	58	60	60	61	63	68	70	73	77	93	96	111	111	139	170	188	209	258				
		120	60	60	62	64	66	67	68	71	74	85	99	108	113	139	157	188	201	242	289			
	12N@ 8.33	84	50	54	58	66	70	75	89	92	101	112	129	138	159	187	221	257						
		96	50	54	57	61	68	70	80	84	96	106	116	123	137	179	205	228	271					
		108	52	54	58	62	65	72	74	79	89	101	110	121	128	164	193	221	246	299				
		120	54	57	60	62	66	69	77	79	86	92	107	117	126	151	178	206	239	283				
	16N@ 6.25	84	55	60	71	76	83	96	110	112	119	139	161	184	199	235	288							
		96	56	60	67	75	79	88	102	105	119	128	145	168	191	218	265	301						
		108	58	63	67	72	81	87	93	106	111	125	136	157	180	204	251	292						
		120	60	65	68	74	79	90	93	98	110	117	134	147	166	208	248	275	304					
	17N@ 5.88	84	57	65	73	82	92	98	112	114	123	151	164	187	203	250								
		96	60	65	72	81	89	103	110	123	123	145	177	179	198	256	285							
		108	64	67	72	76	86	96	108	113	123	135	158	172	182	231	264	308						
		120	67	68	73	80	85	90	99	112	119	133	143	167	178	214	250	281	330					
	20N@ 5.00	84	67	77	87	105	115	122	132	148	159	193	208	226	246									
		96	67	73	82	95	111	120	126	135	152	177	199	211	227	279								
		108	66	72	79	91	101	116	125	130	131	162	184	197	207	267	316							
		120	71	75	82	88	96	106	120	123	136	149	170	193	205	246	289	332						
Bearing Depth			7 1/2 in.										10 in.											

Joist Girder weights between the heavy black and blue lines have 7 1/2 inch bearing depths.
Joist Girder weights to the right of the heavy blue line have 10 inch bearing depths. Check with Vulcraft for material availability.

APPENDIX A - FIRE-RESISTANCE RATINGS WITH STEEL JOISTS

The Underwriters Laboratories (U.L.) Fire Resistance Directory lists hundreds of assemblies and their fire resistance ratings. The Specifying Professional can choose between numerous Floor-Ceiling and Roof-Ceiling assemblies that include steel joists and Joist Girders.

As a convenience, a selected number of assemblies are listed on the following pages. In addition, the Steel Joist Institute's Technical Digest #10 "Design of Fire Resistive Assemblies with Steel Joists" has a complete listing of steel joist assemblies and additional information about fire ratings. However, the listing that follows and the Technical Digest are intended as a guide only, and the Specifying Professional must refer to the current U.L. Fire Resistance Directory for complete design requirements.

Hundreds of fire tests on steel joist-supported assemblies have been conducted at nationally recognized testing laboratories in accordance with ASTM Standard E119, ANSI A2.1/UL 263, and NFPA 251. Because of practical loading restrictions and limitations of furnace dimensions, the vast majority of these tests were run using lightweight joists – normally from 8 inches to 14 inches (203 mm to 356 mm) deep. This practice was advantageous in that it established the *minimum* acceptable joists at the shallow and lightweight end of the joist load tables. This also resulted in a specified minimum joist designation being listed in the U.L. Fire Resistance Assembly, which is the joist that combines the required minimum depth and minimum weight per foot. Joists of the same series which equal or exceed the specified minimum joist depth and joist weight per foot may be used provided the accessories are compatible. The dimension from the bottom chord of the joists to the ceiling, whether given or calculated, is a minimum.

Where a U.L. Fire Resistance Assembly is being utilized, the Specifying Professional shall indicate the assembly number being used on the structural contract drawings. In addition, the Specifying Professional shall consider the following, as applicable:

- Joist designations specified on the structural contract drawings shall not be less than the minimum size for that assembly. The assembly may also require a minimum bridging size that may be larger than required by the SJI Specifications for the particular designation and joist spacing.
- Some assemblies stipulate minimum size materials or minimum cross sectional areas for individual joist and Joist Girder components. It is the responsibility of the Specifying Professional to show all special requirements on the contract drawings.
- Note that the maximum joist spacing shown for Floor-Ceiling Assemblies may be increased from the spacing listed in the U.L. Fire Resistance Directory to a maximum of 48 inches on center, provided the floor slab meets the structural requirements and the spacing of hanger wires supporting the ceiling is not increased.

- Some assemblies stipulate an allowable maximum joist design stress level less than the 30 ksi (207 MPa) used in the joist and Joist Girder specifications. It is the responsibility of the Specifying Professional to apply the proper stress level reductions (when applicable) when selecting joists and/or Joist Girders. This is accomplished by prorating the joist and/or Joist Girder capacities. To adjust the stress level of joists or Joist Girders, multiply the design load by the ratio of the joist design stress to the required maximum [e.g. 30/26 (207/179), 30/24 (207/165), 30/22 (207/152)], and then using this increased load, select a joist or Joist Girder from the load and/or weight tables.
- Some U.L. Roof-Ceiling Assemblies using direct applied protection limit the spacing of the joists for certain types and gages of metal decking – refer to the U.L. Fire Resistance Directory for this information.
- Where fire protective materials are to be applied directly to the steel joists or Joist Girders, it is often desired to have the joist furnished as unpainted. The Specifying Professional should indicate on the structural contract drawings if the joists or Joist Girders are to be painted or not.
- Certain older U.L. fire rated assemblies may refer to joist series that predate the K-series joists. Where one of these assemblies is selected, refer to the U.L Fire Resistance Directory for special provisions for substituting a K-Series joist in lieu of an S-, J-, and/or H-Series joist.

ROOF – CEILING ASSEMBLIES WITH MEMBRANE PROTECTION

Restrained Assembly Rating	Protection Material	Minimum Joist Size	Built Up Roof		Maximum Joist Spacing (in.)	Minimum Primary Support Member	UL Design Number
			Deck Material Description	Insulation			
1 Hr.	Exposed Grid	12K1	22 MSG Min.	Fiber Board	84	W8 x 17	P201
		10K1	26 MSG Min.		48	W6 x 12	P202
		10K1	26 MSG Min.		48	20G@13plf	P211
		12K3	28 MSG Min.		72	20G@13plf W8 x 17	P214
		12K1	26 MSG Min.		72	20G@13plf W6 x 12	P225
		12K3	24 MSG Min.	Building Units	48	NS	P227
		12K3	26 MSG Min.	Fiber Board	72	20G@13plf W6 x 12	P230
		12K1	26 MSG Min.	Insulating Concrete	48	20G@14plf* W8 x 15	P231
		12K3	24 MSG Min.	Foamed Plastic	72	W8 x 15	P235
		10K1	28 MSG Min.	Insulating Concrete	72	20G@13plf W8 x 15	P246
		12K5	26 MSG Min.	Fiber Board	48	W6 x 12	P250
		12K1	28 MSG Min.	Insulating Concrete	72	20G@13plf W6 x 12	P251
		10K1	22 MSG Min.	Fiber Board	72	W6 x 12	P254
		10K1	28 MSG Min.	Insulating Concrete	72	W8 x 15	P255
		10K1	24 MSG Min.	Fiber Board	72	NS	P259
		12K1	28 MSG Min.	Insulating Concrete	72	20G@13plf W6 x 12	P261
		12K1	26 MSG Min.	Insulating Concrete	72	W8 x 15	P264
		10K1	Metal Roof Deck Panels	Batts and Blankets	60	NS	P265
		10K1	26 MSG Min.	Fiber Board	48	W6 x 16	P267
		10K1	Metal Roof Deck Panels	Batts and Blankets	60	NS	P268
		12K1	26 MSG Min.	Insulating Concrete	72	20G@14plf* W8 x 15	P269
	Fiber Board	10K1	24 MSG Min.	Fiber Board	NS	W6 x 16	P301
		10K1	22 MSG Min.		48	NS	P302
		10K1	22 MSG Min.		NS	W6 x 16	P303
	Gypsum Board	12K3	26 MSG Min.	Insulating Concrete	60	W8 x 24	P509
		12K3	24 MSG Min.	Fiber Board	72	20G@13plf	P510

						W8 x 13	
		10K1	22 MSG Min.	Fiber Board	72	20G@13plf	P514
		10K1	20 MSG Min.	Fiber Board	48	NS	P519
1 1/2 Hr.	Exposed Grid	12K1	26 MSG Min.	Fiber Board	72	20G@13plf W6 x 12	P225
		12K3	24 MSG Min.	Building Units	48	NS	P227
		12K3	26 MSG Min.	Fiber Board	48	20G@13plf W6 x 12	P230
		12K1	26 MSG Min.	Insulating Concrete	48	20G@14plf* W8 x 24	P231
		12K5	26 MSG Min.	Fiber Board	48	W6 x 12	P250
		12K1	28 MSG Min.	Insulating Concrete	72	20G@13plf W6 x 12	P251
		10K1	24 MSG Min.	Fiber Board	72	NS	P259
		10K1	Metal Roof Deck Panels	Batts and Blankets	60	NS	P265
		10K1	20 MSG Min.	Fiber Board	48	NS	P266
		10K1	Metal Roof Deck Panels	Batts and Blankets	60	NS	P268
		12K1	26 MSG Min.	Insulating Concrete	72	20G@14plf* W8 x 24	P269
	Fiber Board	10K1	24 MSG Min.	Fiber Board	NS	W6 x 16	P301
	Metal Lath	12K5	22 MSG Min.	Fiber Board	72	NS	P404
	Gypsum Board	12K3	24 MSG Min.	Fiber Board	72	20G@13plf W8 x 13	P510
2 Hr.	Exposed Grid	10K1	24 MSG Min.	Fiber Board	72	W6 x 12	P237
		12K1	28 MSG Min.	Insulating Concrete	72	20G@13plf W6 x 12	P251
		10K1	20 MSG Min.	Fiber Board	48	NS	P266
	Fiber Board	10K1	24 MSG Min.	Fiber Board	NS	W6 x 16	P301
	Metal Lath	12K5	22 MSG Min.	Fiber Board	72	NS	P404
	Gypsum Board	10K1	22 MSG Min.	Fiber Board	72	20G@13plf	P514
			20 MSG Min.		48	NS	P519
		14K1	26 MSG Min.	Insulating Concrete	66	NS	P520
3 Hr.	Metal Lath	10K1	28 MSG Min.	Insulating Concrete	48	NS	P405

***Special Area Requirements**

ROOF – CEILING ASSEMBLIES WITH SPRAY APPLIED FIRE RESISTIVE MATERIALS

Restrained Assembly Rating	Protection Material	Minimum Joist Size	Built Up Roof		Maximum Joist Spacing (in.)	Minimum Primary Support Member	UL Design Number
			Deck Material Description	Insulation			
1 Hr.	SAFRM	10K1	22 MSG Min.	Building Units	NS	NS	P822
		12K3	22 MSG Min.	Fiber Board	NS	W8 x 20	P824
1 Hr. and 1-1/2 Hr.	SAFRM	12K5	28 MSG Min.	Insulating Concrete	96	W6 x 16	P919
1-1/2 Hr. and 2 Hr.	SAFRM	10K1	22 MSG Min.	Building Units	NS	W6 x 16	P728
1 Hr., 1-1/2 Hr. and 2 Hr.	SAFRM	14K4	22 MSG Min.	Fiber Board	NS	20G@13plf W6 x 16	P701
		14K4	22 MSG Min.	Fiber Board	NS	20G@13plf W6 x 16	P711
		12K3	22 MSG Min.	Foamed Plastic	NS	W6 x 16	P717
		10K1	22 MSG Min.	Foamed Plastic	NS	20G@13plf W8 x 28	P725
		10K1	22 MSG Min.	Fiber Board	NS	20G@13plf W6 x 16	P726
		14K4	22 MSG Min.	Fiber Board	NS	20G@13plf W6 x 16	P734
		14K4	22 MSG Min.	Fiber Board	NS	20G@13plf W6 x 16	P736
		10K1	22 MSG Min.	Foamed Plastic	NS	W6 x 16	P739
		10K1	22 MSG Min.	Fiber Board	NS	W6 x 16	P740
		10K1	22 MSG Min.	Foamed Plastic	NS	W6 x 16	P743
		12K3	22 MSG Min.	Fiber Board	NS	20G@13plf W6 x 16	P801
		10K1	22 MSG Min.	Fiber Board	NS	20G@13plf W6 x 16	P815
		10K1	22 MSG Min.	Fiber Board	NS	W6 x 16	P816
		10K1	22 MSG Min.	Foamed Plastic	NS	W6 x 16	P819
		10K1	22 MSG Min.	Foamed Plastic	NS	W6 x 16	P825
		10K1	22 MSG Min.	Foamed Plastic	NS	W6 x 16	P827
		12K1	22 MSG Min.	Fiber Board	NS	20G@13plf W8 x 20	P828
		10K1	28 MSG Min.	Insulating Concrete	NS	20G@13plf W8 x 10	P902

		10K1	28 MSG Min.	Insulating Concrete	NS	W8 x 10	P907
		10K1	28 MSG Min.	Insulating Concrete	NS	20G@13plf W8 x 10	P908
		10K1	28 MSG Min.	Insulating Concrete	NS	W8 x 10	P920
		12K5	28 MSG Min.	Insulating Concrete	NS	20G@13plf W8 x 10	P921
		10K1	28 MSG Min.	Insulating Concrete	NS	W6 x 16	P922
		10K1	28 MSG Min.	Insulating Concrete	NS	20G@13plf W8 x 10	P923
		10K1	28 MSG Min.	Insulating Concrete	NS	20G@13plf W8 x 10	P925
		12K5	28 MSG Min.	Insulating Concrete	NS	W8 x 10	P926
		14K4	28 MSG Min.	Insulating Concrete	NS	20G@13plf W8 x 10	P927
		12K5	28 MSG Min.	Insulating Concrete	NS	20G@13plf W8 x 10	P928
		12K3	28 MSG Min.	Insulating Concrete	NS	20G@13plf W8 x 10	P929
		10K1	28 MSG Min.	Insulating Concrete	NS	W6 x 16	P936
2 Hr.	SAFRM	12K3	22 MSG Min.	Foamed Plastic	NS	W6 x 16	P718
		12K3	22 MSG Min.	Foamed Plastic	NS	20G@13plf W6 x 16	P720
		12K3	22 MSG Min.	Foamed Plastic	NS	W6 x 16	P729
1 Hr., 1-1/2 Hr. 2 Hr. and 3 Hr.	SAFRM	10K1	22 MSG Min.	Foamed Plastic	NS	20G@13plf W6 x 16	P719
		10K1	22 MSG Min.	Foamed Plastic	NS	W6 x 16	P722
		10K1	22 MSG Min.	Foamed Plastic	NS	W6 x 16	P723
		10K1	22 MSG Min.	Foamed Plastic	NS	W8 x 28	P732
		10K1*,16K2	22 MSG Min.	Foamed Plastic	NS	W6 x 16	P733
		10K1*	22 MSG Min.	Foamed Plastic	NS	W6 x 16	P826

*** Special Area Requirements**

FLOOR – CEILING ASSEMBLIES WITH MEMBRANE PROTECTION

Restrained Assembly Rating	Protection Material	Minimum Joist Size	Concrete		Maximum Joist Spacing (in.)	Minimum Primary Support Member	UL Design Number
			Minimum Thickness (in.)	Type			
1 Hr.	Acoustical	12K1, 18LH02	2.5	LW, NW	NL	20G@13plf W8 x 15	D216
							D219
	Exposed Grid	10K1	2.5	NW	48*	20G@14plf W6 x 12	G205
		10K1	2.0		72	W6 x 12	G208
		10K1	2.5		48*	20G@14plf W6 x 12	G256
	Gypsum Board	10K1	2.5	NW	48	W8 x 24	G548
1 1/2 Hr.	Acoustical	12K1, 18LH02	2.5	LW, NW	NL	20G@13plf W8 x 15	D216
							D219
	Gypsum Board			NW		20G@20plf W8 x 28	D502
	Exposed Grid	10K1	2.5	NW	24 (48)	20G@13plf W6 x 12	G203
		10K1	2.5		48*	20G@14plf W6 x 12	G205
		10K1	2.0		72	W6 x 12	G208
		10K1	2.5		24 (48)		G213
		10K1	2.5		24 (48)	20G@13plf W8 x 31	G228
		10K1	2.0		24 (48)	20G@13plf W8 x 24	G229
		10K1	2.5		24 (48)	20G@13plf W6 x 12	G243
		10K1	2.5		24 (48)	20G@13plf W8 x 31	G268
	Gypsum Board	12K1	2.0	NW	24 (48)	NS	G502
2 Hr.	Acoustical	12K1, 18LH02	2.5	LW, NW	NL	20G@13plf W8 x 15	D216
							D219
	Gypsum Board			NW		20G@20plf W8 x 28	D502
	Concealed Grid	10K1	2.25	NW	24 (48)	W6 x 25	G023
		8K1	2.5		24 (48)	20G@13plf W8 x 20	G031
		10K1			30 (48)	20G@13plf W10 x 21	G036
	Exposed Grid	10K1	2.5	NW	24 (48)	20G@13plf W6 x 12	G203
		10K1	2.5		48*	20G@14plf W6 x 12	G205
		10K1	2.5		72	W6 x 12	G208

		10K1	2.5		24 (48)		G213
		10K1	2.5		24 (48)	W8 x 31	G227
		10K1	2.5		24 (48)	20G@13plf W8 x 31	G228
		10K1	2.5		24 (48)	20G@13plf W8 x 24	G229
		10K1	2.5		24 (48)	20G@13plf W6 x 12	G243
		10K1	2.5		48*	20G@14plf W6 x 12	G256
		10K1	2.5		24 (48)	20G@13plf W8 x 31	G268
	Gypsum Board	10K1	2.0	NW	24 (48)	NS	G505
		10K1	2.5		24 (48)	20G14plf W8 x 31	G514
		10K1	2.5		24 (48)	20G@13plf W10 x 21	G523
		10K1	2.5		24 (48)	20G@13plf W8 x 24	G529
		10K1	2.5		24 (48)	20G@13plf W10 x 21	G547
3 Hr.	Acoustical	12K1, 18LH02	3.25	LW, NW	NL	20G@13plf W8 x 15	D216
							D219
	Concealed Grid	10K1	3.5	NW	24 (48)	20G@13plf W8 x 20	G033
		10K1	3.25		30 (48)	20G@13plf W10 x 21	G036
	Exposed Grid	10K1	3.5	NW	48*	20G@14plf W6 x 12	G205
		10K1	3.5		24 (48)	W6 x 12	G213
		10K1	3.25		24 (48)	20G@13plf W8 x 24	G229
		10K1	3.5		48*	W6 x 12	G256
		10K1 (22 ksi max.)	2.63		24 (48)	20G@13plf W8 x 31	G268
	Gypsum Board	10K1	3.0	NW	24 (48)	20G@13plf W10 x 21	G523
		10K1	2.75		24 (48)	20G@13plf W8 x 24	G529
		10K1	3.0		24 (48)	20G@13plf W10 x 21	G547

FLOOR – CEILING ASSEMBLIES WITH SPRAY APPLIED FIRE RESISTIVE MATERIALS

Restrained Assembly Rating	Protection Material	Minimum Joist Size	Concrete		Maximum Joist Spacing	Minimum Primary Support Member	UL Design Number
			Minimum Thickness (in.)	Type			
1 Hr.	SAFRM	NS	2.5	LW, NW	NL	W8 x 28	D759
		10K1	2.5				D779
		10K1	2.5				D780
		NS	3.25	LW			D782
		10K1*	2.5	LW			D925
			3.5	NW			
		16K6*	NS	LW, NW	42	20G@20plf W8 x 28	G701
		16K6	3.0	LW	50.5	NS	G702
			3.75	NW			
		16K6*	2.5	LW, NW	42	NS	G705
		16K6	3.0	LW	50.5	NS	G706
			3.75	NW			
		16K6*	2.5	LW, NW	42	20G@20plf W8 x 28	G708
		NS	2.5		42	W8 x 28	G709
		16K6*	2.5		42	20g@20plf W8 x 24	G801
		12K1	3.0	LW	50.5	NS	G802
			3.75	NW			
1 1/2 Hr.	SAFRM	NS	2.5	LW, NW	NL	W8 x 28	D759
		10K1	2.5				D779
		10K1	2.5				D780
		NS	3.25	LW			D782
		10K1*	3.0	LW			D925
			4.0	NW			
		16K6*	2.5	LW, NW	42	20G@20plf W8 x 28	G701
		16K6	3.5	LW	50.5	NS	G702
			4.5	NW			
		16K6*	2.5	LW, NW	42	NS	G705
		16K6	3.5	LW	50.5	NS	G706
			4.5	NW			
		16K6*	2.5	LW, NW	42	20G@20plf W8 x 28	G708
		NS	2.5		42	W8 x 28	G709
		16K6*	2.5		42	20G@20plf W8 x 24	G801
		12K5	3.5	LW	50.5	NS	G802
			4.5	NW			

2 Hr.	SAFRM	NS	2.5	LW, NW	NL	W8 x 28	D759
		10K1	2.5				D779
		10K1	2.5				D780
		NS	3.25	LW			D782
		10K1*	3.25	LW			D925
			4.5	NW			
		16K6*	2.5	LW, NW	42	20G@20plf W8 x 28	G701
		16K6	4.0	LW	50.5	NS	G702
			5.25	NW			
		16K6*	2.5	LW,NW	42	NS	G705
		16K6	4.0	LW	50.5	NS	G706
			5.25	NW			
		16K6*	2.5	LW, NW	42	20G@20plf W8 x 28	G708
		NS	2.5		42	W8 x 28	G709
		16K6*	2.5		42	20G@20plf W8 x 24	G801
		12K5	4.0	LW	50.5	NS	G802
			5.25	NW			
3 Hr.	SAFRM	NS	2.5	LW, NW	NL	W8 x 28	D759
		10K1	2.5				D779
		10K1	2.5				D780
		NS	3.25	LW			D782
		10K1*	4.19	LW			D925
			5.25	NW			
		16K6*	NS	LW, NW	42	20G@20plf W8 x 28	G701
		16K6*	2.75		42	NS	G705
		16K6*	2.75		42	20G@20plf W8 x 28	G708
		NS	2.75		42	W8 x 28	G709
		16K6*	2.75		42	20G@20plf W8 x 24	G801
4 Hr.	SAFRM	10K1	2.5	LW, NW	NL	W8 x 28	D779
		NS	3.25	LW			D782

*** Special Area Requirements**

Combined K, VS, LH & DLH Series Load Table

The following table is an economy guide with the Joists listed in sequence of increasing relative cost. That is, the most economical joist for given length is listed first. The economies were based on production costs and do not include bridging requirements or erection costs.

HOW TO USE THE ECONOMICAL JOIST GUIDE: The specifying professional simply turns to the length required and proceeds down the allowable loads column until the first joist type in the list that will carry the required load is found. (However, additional bridging due to erection stability requirements should be taken into consideration.) This will then be the most economical joist type for the combination of length and required load. The approximate weight per foot of the joist is listed to the right of the live load.

EXAMPLE: Given 40'-0" length and a required load of 300 plf. On page 126 of the table under 40', it is found that a 30K7 at 40'-0" will carry 319 plf TL.

The figures shown in red are the uniform load, in pounds per lineal foot, which will produce an approximate deflection of 1/360 of the length. If a deflection limitation of 1/240 is required multiply the figures in red by 1.5. In no case shall the total load capacity of the joist be exceeded.

NOTE: Length as used in the economical joist guide means: **clear span + 8" for K Series and clear span + 12" for LH and DLH Series joists.**

You will note that the tables have been shaded to match the load tables. This shading indicates when bolted cross bridging needs to be installed per the Steel Joist Institute specification for a particular joist series.
Where the joist span is in the **GREEN SHADED** area of the table, the row of bridging nearest the mid span shall be diagonal bridging with bolted connections at chords and intersection. Hoisting cables shall not be released until this row of bolted diagonal bridging is completely installed.

Where the joist span is in the **BLUE SHADED** area of the table, all rows of bridging shall be diagonal bridging with bolted connections at chords and intersection. Hoist cables shall not be released until the two rows of bridging nearest the third points are completely installed.

Where the joist span is in the **GRAY SHADED** area of the table hoisting cables shall not be released until all rows of bridging are completely installed.

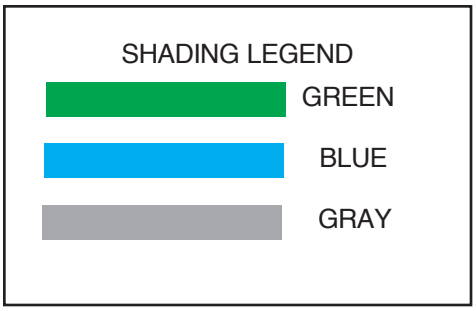

Total loads shown in the table are allowable total loads in ASD; the loads multiplied by 1.5 are approximately factored total loads in LRFD.

ECONOMICAL JOIST GUIDE
Combined K, VS, LH & DLH Series Load Table

Joist Type	Allowable Loads (PLF) Total	Uniform	Joist Weight (lbs./ft.)
10' LENGTH			
10K 1	550	550	5.0
11' LENGTH			
10K 1	550	542	5.0
12' LENGTH			
10K 1	550	455	5.0
13' LENGTH			
10K 1	479	363	5.0
12K 1	550	510	5.0
14' LENGTH			
10K 1	412	289	5.0
14K 1	550	550	5.2
15' LENGTH			
10K 1	358	234	5.0
12K 1	434	344	5.0
14K 1	511	475	5.2
14K 3	550	507	5.9
16' LENGTH			
10K 1	313	192	5.0
12K 1	380	282	5.0
14K 1	448	390	5.2
12K 3	476	351	5.7
14K 3	550	467	5.9
17' LENGTH			
10K 1	277	159	5.0
12K 1	336	234	5.0
14K 1	395	324	5.2
12K 3	420	291	5.7
16K 2	512	488	5.5
16K 3	550	526	6.3
18' LENGTH			
10K 1	246	134	5.0
12K 1	299	197	5.0
14K 1	352	272	5.2
12K 3	374	245	5.5
14K 3	441	339	5.8
16K 2	456	409	5.5
16K 3	508	456	6.3
14K 4	530	397	6.7
14K 6	550	408	6.9
19' LENGTH			
10K1	221	113	5.0
12K1	268	167	5.0
14K1	315	230	5.2
12K3	335	207	5.6
16K2	408	347	5.5
16K3	455	386	6.3
18K3	514	494	6.6
16K4	547	452	7.0
16K5	550	455	7.2
20' LENGTH			
12K 1	241	142	5.0
14K 1	284	197	5.2
12K 3	302	177	5.5
20' LENGTH (Cont.)			
16K2	368	297	5.5
16K3	410	330	6.2
18K3	463	423	6.5
16K4	493	386	7.0
16K5	550	426	7.5
21' LENGTH			
12K1	218	123	5.0
14K1	257	170	5.2
12K3	273	153	5.5
14K3	322	212	5.7
16K2	333	255	5.5
16K3	371	285	6.3
18K3	420	364	6.6
16K4	447	333	7.0
20K3	468	453	6.7
16K5	503	373	7.5
18K4	506	426	7.2
20K4	550	520	7.6
22' LENGTH			
12K1	199	106	5.0
14K1	234	147	5.1
12K3	249	132	5.5
14K3	293	184	5.6
16K2	303	222	5.5
16K3	337	247	6.2
18K3	382	316	6.5
16K4	406	289	6.9
20K3	426	393	6.7
18K4	460	370	7.2
20K4	514	461	7.6
18K5	518	414	7.7
22K6	550	548	7.5
18LH2	554	439	8.8
18LH3	614	488	10
18LH4	715	566	11
18LH5	808	637	12
18LH6	955	738	14
18LH7	992	776	15
18LH8	1034	810	15
18LH9	1108	864	16
23' LENGTH			
14K1	214	128	5.1
12K3	227	116	5.5
16K2	277	194	5.5
16K3	308	216	6.0
18K3	349	276	6.6
16K4	371	252	7.0
20K3	389	344	6.7
18K4	420	323	7.2
20K4	469	402	7.6
18K5	473	362	7.7
22K6	550	518	7.7
18LH3	587	446	10
18LH4	684	517	11
20LH5	697	589	11
18LH5	772	582	13
18LH6	913	674	15
18LH7	949	709	15
20LH8	1024	858	15
18LH9	1059	790	16
20LH9	1121	935	16
20LH10	1209	1008	17
24' LENGTH			
14K1	196	113	5.1
12K3	208	101	5.6
24' LENGTH (Cont.)			
16K2	254	170	5.5
16K3	283	189	6.1
18K3	320	242	6.5
16K4	340	221	6.9
20K3	357	302	6.7
18K4	385	284	7.2
20K4	430	353	7.6
18K5	434	318	7.7
18K6	473	345	8.5
20K5	485	396	8.2
24K6	550	544	7.7
18LH3	562	409	10
20LH4	621	503	10
18LH4	655	474	11
20LH5	668	540	11
18LH5	739	534	12
18LH6	875	619	15
20LH6	892	713	15
18LH7	908	650	15
18LH8	946	679	16
20LH7	951	761	15
20LH8	980	787	16
18LH9	1014	725	17
20LH9	1073	857	16
20LH10	1158	924	17
25' LENGTH			
14K1	180	100	5.1
16K2	234	150	5.5
16K3	260	167	5.9
18K3	294	214	6.3
16K4	313	195	6.9
20K3	329	266	6.7
18K4	355	250	7.1
16K6	384	238	8.1
18K5	400	281	7.7
16K7	428	263	8.6
18K6	435	305	8.5
20K5	446	350	8.2
18K7	485	337	9.0
20K6	486	380	8.9
16K9	514	311	10
24K6	550	520	8.6
20LH4	596	463	10
18LH4	628	436	11
20LH5	641	497	11
18LH5	709	492	13
20LH6	855	656	15
18LH7	872	599	16
18LH8	908	625	16
20LH7	912	701	16
20LH8	941	724	16
18LH9	973	667	17
20LH9	1030	789	17
20LH10	1111	851	18
26' LENGTH			
14K1	166	83	5.1
16K2	216	133	5.5
16K3	240	148	5.9
18K3	272	190	6.4
16K4	289	173	6.8
20K3	304	236	6.7
18K4	328	222	7.2
20K4	366	277	7.6
18K5	369	249	7.7
22K4	404	338	8.0
20K5	412	310	8.2
20K6	449	337	8.9
22K5	455	379	8.8
26K5	542	535	8.8
26' LENGTH (Cont.)			
24K6	543	493	8.9
24K7	550	499	9.2
20LH4	574	428	11
18LH4	604	403	12
20LH5	616	459	11
18LH5	684	454	13
20LH6	822	606	15
18LH7	840	553	16
18LH8	876	577	16
20LH7	878	647	16
18LH9	936	616	17
20LH9	990	729	17
20LH10	1068	786	18
27' LENGTH			
14K1	154	79	5.1
16K2	200	119	5.5
16K3	223	132	5.9
18K3	252	169	6.3
16K4	268	155	6.8
20K3	281	211	6.6
18K4	303	198	7.0
20K4	339	247	7.4
18K5	342	222	7.7
22K4	374	301	8.0
20K5	382	277	8.2
20K6	416	301	8.8
22K5	422	337	8.7
24K6	503	439	8.6
26K6	547	519	8.9
26K7	550	522	9.1
20LH4	566	406	11
18LH4	571	367	12
20LH5	609	437	12
18LH5	648	414	14
20LH6	791	561	15
20LH7	845	599	16
20LH8	873	619	16
20LH9	953	675	17
20LH10	1028	724	19
28' LENGTH			
14K1	143	70	5.1
16K2	186	106	5.5
16K3	207	118	5.8
18K3	234	151	6.2
16K4	249	138	6.6
20K3	261	189	6.7
16K5	281	155	7.4
18K4	282	177	7.2
20K4	315	221	7.5
18K5	318	199	7.7
18K6	346	216	8.5
20K5	355	248	8.2
22K5	392	302	8.8
26K5	466	427	8.1
24K6	467	393	8.5
22K7	475	364	9.2
26K6	508	464	8.9
28K6	548	541	9.2
28K7	550	543	9.2
20LH4	558	386	12
20LH5	602	416	13
18LH5	614	378	14
20LH6	763	521	15
20LH7	814	556	16
20LH8	842	575	17
20LH9	918	626	18
20LH10	991	673	20

ECONOMICAL JOIST GUIDE
Combined K, VS, LH & DLH Series Load Table

Joist Type	Allowable Loads (PLF) Total	Uniform	Joist Weight (lbs./ft.)
29' LENGTH			
16K3	193	106	5.9
18K3	218	136	6.2
16K4	232	124	6.7
20K3	243	170	6.6
18K4	263	159	7.0
20K4	293	199	7.4
18K5	296	179	7.7
22K4	324	242	7.8
20K5	330	223	8.1
22K5	365	272	8.7
26K5	434	384	8.0
24K6	435	354	8.4
28K6	511	486	9.1
28K7	550	522	9.5
18LH5	581	345	14
20LH5	595	395	13
18LH6	648	377	15
24LH6	708	567	14
24LH7	778	623	15
20LH7	786	518	16
24LH8	830	662	16
24LH9	977	775	18
24LH10	1033	822	19
24LH11	1088	861	20
30' LENGTH			
18K3	203	123	6.1
16K4	216	112	6.6
20K3	227	153	6.5
18K4	245	144	6.9
20K4	274	179	7.3
18K5	276	161	7.7
20K5	308	201	8.0
20K6	336	218	8.7
22K6	371	266	8.2
26K5	405	346	8.0
24K6	406	319	8.4
26K6	441	377	8.8
28K6	477	439	9.0
26K7	492	417	9.2
28K7	531	486	9.5
26K8	544	457	10
26K9	550	459	10
20LH5	571	366	13
18LH6	605	340	15
24LH6	684	529	14
24LH7	752	582	15
24LH8	802	618	16
24LH9	944	724	18
24LH10	998	768	19
24LH11	1052	804	21
31' LENGTH			
16K4	203	101	6.6
20K3	212	138	6.6
18K4	229	130	6.9
20K4	256	162	7.4
18K5	258	146	7.7
22K4	283	198	7.8
20K5	289	182	8.1
24K4	310	237	8.4
20K6	314	198	8.8
22K5	319	222	8.7
22K6	347	241	8.3
26K5	379	314	8.1
24K6	380	289	8.6
22K7	387	267	8.8
28K6	446	397	9.0
22K9	465	316	10
28K8	550	480	10
24LH6	662	495	14

Joist Type	Allowable Loads (PLF) Total	Uniform	Joist Weight (lbs./ft.)
31' LENGTH (Cont.)			
24LH7	727	545	15
24LH8	776	579	16
24LH9	913	677	19
24LH10	965	718	20
24LH11	1017	752	21
32' LENGTH			
16K2	142	71	5.5
16K3	158	79	5.8
18K3	178	101	6.1
20K4	240	147	7.2
18K5	242	132	7.6
20K5	271	165	7.9
24K4	290	215	8.1
22K5	299	201	8.4
22K6	326	219	8.4
26K5	356	285	8.0
24K6	357	262	8.5
26K6	387	309	8.6
28K6	418	361	8.9
22K9	436	287	10
28K7	466	400	9.5
26K8	477	375	9.9
28K8	515	433	10
28K9	549	463	11
24LH6	641	465	14
24LH7	704	511	15
24LH8	752	543	16
24LH9	884	635	19
24LH10	935	674	20
24LH11	985	705	20
33' LENGTH			
18K3	168	92	6.1
20K4	226	134	7.3
22K4	249	164	7.9
20K5	254	150	8.1
24K4	273	196	8.3
20K6	277	163	8.7
22K5	281	183	8.5
26K5	334	259	8.0
24K6	335	239	8.3
26K6	364	282	8.6
28K6	393	329	8.8
26K7	406	312	9.1
28K7	438	364	9.4
28K8	484	399	10
26K9	488	370	11
28K9	527	432	11
28K10	532	435	11
24LH6	621	437	15
24LH7	683	480	16
24LH8	729	510	16
24LH9	857	597	19
24LH10	906	633	20
24LH11	955	663	22
34' LENGTH			
18K3	158	84	6.1
20K3	176	105	6.4
18K4	190	98	6.9
18K6	233	120	8.2
24K4	257	179	8.1
20K6	261	149	8.6
22K5	265	167	8.4
26K5	315	237	7.9
26K6	343	257	8.5
28K6	370	300	8.8
26K7	382	285	9.1
28K7	412	333	9.4

Joist Type	Allowable Loads (PLF) Total	Uniform	Joist Weight (lbs./ft.)
34' LENGTH (Cont.)			
24K9	423	286	10
28K8	456	364	10
28K9	496	395	11
28K10	516	410	11
28LH6	552	443	13
28LH7	624	499	14
28LH8	668	533	15
24LH8	707	480	17
28LH9	823	656	17
24LH9	832	562	20
28LH10	900	714	19
28LH11	965	763	20
28LH12	1060	835	23
28LH13	1105	872	23
35' LENGTH			
18K3	149	77	6.1
20K3	166	96	6.5
18K4	179	90	6.9
20K4	200	112	7.3
20K6	246	137	8.7
26K5	297	217	7.9
26K6	323	236	8.5
28K6	349	275	8.7
26K7	360	261	9.0
28K7	389	305	9.4
28K8	430	333	9.9
26K9	433	310	10
28K9	468	361	11
28K10	501	389	11
28LH6	537	417	13
28LH7	606	471	14
28LH8	649	503	15
24LH8	677	447	17
28LH9	799	618	18
28LH10	874	673	20
28LH11	938	719	21
28LH12	1030	787	23
28LH13	1073	822	24
36' LENGTH			
18K3	141	70	6.1
20K3	157	88	6.4
18K4	169	82	6.9
20K4	189	103	7.2
18K5	191	92	7.5
24K6	281	183	8.3
22K7	286	169	8.7
24K7	313	203	8.8
28K6	330	252	8.8
26K7	340	240	9.1
24K8	346	222	9.5
28K7	367	280	9.4
26K8	376	263	9.8
30K7	395	323	9.6
28K9	442	332	11
28K10	487	366	12
28LH6	521	394	13
28LH7	589	445	14
28LH8	631	475	15
24LH8	649	416	17
28LH9	777	584	18
28LH10	850	636	19
28LH11	911	680	21
28LH12	1001	744	23
28LH13	1043	777	24
37' LENGTH			
20K3	148	81	6.4
20K4	179	95	7.3

Joist Type	Allowable Loads (PLF) Total	Uniform	Joist Weight (lbs./ft.)
37' LENGTH (Cont.)			
26K5	265	183	7.9
24K6	266	169	8.3
28K6	312	232	8.7
26K7	322	221	9.1
28K7	348	257	9.3
30K7	373	297	9.5
28K8	384	282	9.9
26K9	387	262	10
30K8	413	325	10
28K9	418	305	11
30K9	449	352	11
30K10	474	374	12
28LH6	507	373	13
24LH6	530	331	15
28LH7	573	421	15
24LH7	588	367	16
28LH8	614	449	16
24LH8	622	388	17
28LH9	755	553	18
28LH10	826	602	21
28LH11	886	643	21
28LH12	974	704	23
28LH13	1015	735	25
38' LENGTH			
20K3	141	74	6.3
20K4	170	87	7.2
24K6	252	156	8.3
28K6	296	214	8.6
26K7	305	204	9.0
28K7	329	237	9.2
30K7	354	274	9.5
28K8	364	260	9.9
26K9	367	241	10
30K8	391	300	10
28K9	396	282	11
30K9	426	325	11
30K10	461	353	11
28LH6	494	354	13
24LH6	504	306	15
28LH7	558	399	15
24LH7	565	343	16
28LH8	597	426	16
28LH9	735	524	19
28LH10	804	570	20
28LH11	863	609	22
28LH12	948	667	23
28LH13	988	696	26
39' LENGTH			
20K3	133	69	6.4
20K4	161	81	7.3
20K5	181	90	7.9
28K6	280	198	8.6
26K7	289	188	9.0
28K7	313	219	9.1
30K7	336	253	9.5
28K8	346	240	9.9
26K9	348	223	10
30K8	371	277	10
28K9	376	260	11
30K9	404	300	11
26K10	413	262	12
30K10	449	333	12
32LH7	486	388	13
32LH8	528	421	14
28LH7	543	379	15
32LH9	662	526	17
32LH10	732	581	18
32LH11	802	635	20
28LH11	841	578	22

ECONOMICAL JOIST GUIDE
Combined K, VS, LH & DLH Series Load Table

Joist Type	Allowable Loads (PLF) Total	Uniform	Joist Weight (lbs./ft.)
39' LENGTH (Cont.)			
32LH12	941	742	23
28LH13	962	661	26
32LH13	1050	825	25
32LH14	1081	850	26
32LH15	1117	878	26
40' LENGTH			
20K3	127	64	6.4
20K4	153	75	7.2
22K4	169	91	7.6
20K5	172	84	7.9
24K7	253	148	8.9
26K7	275	174	9.0
28K7	297	203	9.1
30K7	319	234	9.4
28K8	328	222	9.9
26K9	331	207	10
28K9	357	241	11
30K9	384	278	11
26K10	393	243	12
30K10	438	315	12
32LH7	474	368	13
32LH8	514	400	14
28LH7	529	360	15
32LH9	645	500	16
32LH10	713	552	18
32LH11	782	604	20
32LH12	918	705	23
32LH13	1024	784	26
32LH14	1054	807	26
32LH15	1089	834	27
41' LENGTH			
22K4	161	85	7.6
24K4	176	101	8.0
24K7	241	137	8.9
26K7	262	162	9.0
24K8	266	150	9.5
24K9	290	162	10
30K7	303	217	9.5
26K9	315	192	10
28K9	340	224	11
30K9	365	258	11
26K10	374	225	12
30K10	427	300	12
32LH7	462	351	13
32LH8	502	380	14
28LH7	516	342	16
32LH9	630	476	17
32LH10	696	525	19
32LH11	762	574	21
28LH11	799	523	23
32LH12	895	671	23
32LH13	998	746	26
32LH14	1028	768	26
32LH15	1062	794	28
42' LENGTH			
22K4	153	79	7.6
24K7	229	127	8.9
26K7	249	150	9.0
24K8	253	139	9.6
28K7	269	175	9.2
26K8	275	164	9.7
30K7	289	202	9.5
26K9	300	178	10
30K8	320	221	10
28K9	324	208	11
30K9	348	240	11
26K10	356	210	12

Joist Type	Allowable Loads (PLF) Total	Uniform	Joist Weight (lbs./ft.)
42' LENGTH (Cont.)			
28K10	384	245	12
30K10	413	282	12
30K11	417	284	12
32LH7	451	334	14
32LH8	490	362	15
28LH7	505	326	16
28LH8	540	348	16
32LH9	614	453	17
32LH10	679	500	19
32LH11	744	547	21
32LH12	874	639	24
32LH13	974	710	26
32LH14	1003	732	27
32LH15	1037	756	28
43' LENGTH			
22K4	146	73	7.5
24K4	160	88	8.0
26K5	196	116	7.9
30K7	276	188	9.3
26K9	286	166	10
30K8	305	206	10
28K9	309	194	11
30K9	332	223	11
26K10	339	195	12
28K10	367	228	12
30K10	394	263	12
30K11	407	270	13
36LH8	434	354	13
32LH7	441	318	14
32LH8	478	346	15
36LH9	555	451	16
36LH10	612	499	17
36LH11	668	543	18
32LH11	727	522	21
36LH12	799	647	21
32LH12	853	610	25
36LH13	940	758	25
32LH13	952	678	27
36LH14	1036	833	28
36LH15	1092	877	29
44' LENGTH			
22K4	139	68	7.5
24K4	153	82	8.1
22K5	157	76	8.3
26K5	187	108	7.9
26K6	204	118	8.5
24K7	209	110	8.9
28K6	220	137	8.6
30K8	291	192	10
28K9	295	181	11
30K9	317	208	11
26K10	324	182	12
28K10	350	212	12
30K10	376	245	12
30K11	398	258	13
36LH8	424	338	13
32LH7	431	304	14
32LH8	467	330	15
36LH9	543	431	16
36LH10	598	476	17
36LH11	653	518	18
36LH12	781	617	21
32LH12	834	582	25
36LH13	918	724	25
36LH14	1012	795	28
36LH15	1067	837	29

Joist Type	Allowable Loads (PLF) Total	Uniform	Joist Weight (lbs./ft.)
45' LENGTH			
24K4	146	76	7.8
26K5	179	101	7.9
26K6	194	110	8.5
28K6	210	128	8.6
26K7	217	122	9.0
24K8	220	113	9.5
28K7	234	142	9.2
24K10	285	144	12
26K10	310	170	12
28K10	334	198	12
30K10	359	229	12
30K11	389	246	13
36LH8	414	323	13
32LH7	421	291	14
32LH8	457	315	15
36LH9	531	412	16
36LH10	584	455	17
36LH11	638	495	19
36LH12	763	590	21
32LH12	815	556	26
36LH13	898	692	25
36LH14	990	760	28
36LH15	1043	800	29
46' LENGTH			
24K4	139	71	7.9
26K5	171	95	7.9
26K6	186	103	8.5
28K6	201	120	8.6
26K7	207	114	9.1
24K8	211	106	9.6
26K8	229	125	9.7
26K10	296	159	12
28K10	320	186	12
30K10	344	214	12
30K11	380	236	14
36LH8	405	309	13
32LH7	412	278	14
28LH7	427	251	16
32LH8	447	302	16
36LH9	519	394	16
36LH10	572	435	18
36LH11	624	474	19
32LH11	679	455	22
36LH12	747	564	23
32LH12	797	532	26
36LH13	878	662	26
36LH14	968	727	28
36LH15	1020	765	30
47' LENGTH			
24K4	133	67	7.9
26K5	164	89	7.9
26K6	178	96	8.5
28K6	192	112	8.6
24K8	202	99	9.6
24K10	261	126	12
26K10	284	149	12
28K10	306	174	12
30K10	329	201	12
36LH7	360	270	12
30K11	372	226	14
36LH8	396	296	13
32LH7	403	266	15
28LH7	410	236	16
32LH8	437	289	16
28LH8	438	525	17
36LH9	508	377	17
36LH10	559	417	18
36LH11	611	454	20
32LH11	664	436	22

Joist Type	Allowable Loads (PLF) Total	Uniform	Joist Weight (lbs./ft.)
47' LENGTH (Cont.)			
36LH12	731	541	23
32LH12	780	510	26
36LH13	859	634	26
32LH13	870	566	28
36LH14	947	696	29
36LH15	999	733	30
48' LENGTH			
24K4	128	63	7.9
26K5	157	83	7.8
26K6	171	90	8.4
24K7	175	85	8.9
28K6	184	105	8.6
24K8	194	93	9.6
24K10	250	118	12
26K10	272	140	12
28K10	294	163	12
30K10	315	188	12
30K12	365	216	14
36LH8	388	284	14
28LH7	394	222	16
32LH8	428	277	16
36LH9	497	362	17
36LH10	548	400	18
36LH11	598	435	20
32LH11	650	418	23
36LH12	715	518	23
32LH12	764	489	27
36LH13	841	607	26
36LH14	927	667	29
36LH15	978	703	31
40LH15	1009	810	31
40LH16	1112	890	34
49' LENGTH			
26K5	150	78	7.9
26K6	164	85	8.4
28K6	177	99	8.6
26K7	183	94	9.1
28K7	197	110	9.3
26K8	202	103	9.7
30K7	212	127	9.4
28K8	218	120	9.9
26K9	220	112	10
30K8	234	139	10
30K10	303	177	12
30K11	347	202	14
30K12	357	207	14
28LH7	379	209	16
32LH8	419	266	16
36LH9	487	347	17
36LH10	536	383	18
36LH11	586	417	20
32LH11	637	401	23
36LH12	701	497	24
32LH12	748	469	27
36LH13	824	583	28
32LH13	834	521	30
32LH14	859	536	31
36LH14	908	640	30
36LH15	958	674	31
40LH15	988	777	31
40LH16	1089	854	34
50' LENGTH			
26K5	144	73	7.9
26K6	157	80	8.5
26K7	175	89	9.1
28K7	189	103	9.3
26K8	194	97	9.7

ECONOMICAL JOIST GUIDE
Combined K, VS, LH & DLH Series Load Table

Joist Type	Allowable Loads (PLF) Total	Uniform	Joist Weight (lbs./ft.)
50' LENGTH (Cont.)			
30K7	203	119	9.4
26K9	211	105	10
28K9	228	123	11
30K9	245	141	11
26K10	250	124	12
28K10	270	144	12
30K11	333	190	14
30K12	350	199	14
36LH8	372	262	14
32LH8	411	255	16
36LH9	477	333	17
36LH10	526	368	18
36LH11	574	400	21
32LH11	625	385	23
36LH12	687	477	23
36LH13	807	559	28
36LH14	890	615	30
36LH15	938	647	32
40LH15	968	746	31
40LH16	1067	820	34
51' LENGTH			
26K5	139	69	7.9
26K6	151	75	8.5
28K6	163	88	8.6
26K7	168	83	9.1
28K7	182	97	9.3
26K8	186	91	9.8
26K9	203	99	10
28K9	219	115	11
30K9	235	133	11
26K10	241	116	12
28K10	260	136	12
30K10	279	157	12
30K11	320	179	14
30K12	343	192	15
28LH7	352	186	16
36LH8	365	251	14
32LH8	397	242	16
36LH9	468	320	17
36LH10	515	354	19
36LH11	563	385	21
32LH11	602	363	23
36LH12	673	459	24
36LH13	791	538	28
32LH13	801	480	30
36LH14	872	591	31
36LH15	920	622	33
40LH15	949	717	31
40LH16	1046	788	33
52' LENGTH			
26K5	133	65	7.9
26K6	145	71	8.4
28K6	157	83	8.6
26K7	162	79	9.1
28K7	175	92	9.3
26K8	179	86	9.7
26K9	195	93	10
28K9	210	109	11
30K9	226	126	11
26K10	231	110	12
28K10	250	128	12
30K10	268	148	12
28K12	325	165	15
30K12	336	184	15
28LH7	339	176	16
32LH8	383	229	16
36LH9	459	308	18
36LH10	505	340	19
36LH11	552	370	21

Joist Type	Allowable Loads (PLF) Total	Uniform	Joist Weight (lbs./ft.)
52' LENGTH (Cont.)			
32LH11	580	343	23
36LH12	660	441	25
36LH13	776	517	28
36LH14	855	568	31
36LH15	902	598	33
40LH15	931	690	31
40LH16	1026	758	34
53' LENGTH			
28K6	151	78	8.6
28K7	168	87	9.2
30K7	181	100	9.4
28K8	186	95	9.9
28K9	203	103	11
30K9	218	119	11
28K10	240	121	12
30K10	258	140	12
40LH8	315	233	12
30K12	330	177	16
44LH9	380	309	14
36LH9	450	296	18
44LH11	454	368	16
32LH9	463	270	19
36LH10	496	327	19
36LH11	541	356	21
44LH12	562	454	19
36LH12	647	424	25
36LH13	761	498	28
44LH14	767	616	26
36LH14	839	547	31
36LH15	885	575	34
44LH15	892	716	31
40LH15	913	664	32
44LH16	1029	824	34
44LH17	1105	880	37
54' LENGTH			
28K6	145	74	8.7
28K7	162	82	9.2
30K7	174	94	9.4
28K8	179	89	9.9
28K9	195	97	11
30K9	209	112	11
28K10	232	114	12
30K10	249	132	12
30K11	285	150	14
40LH8	309	225	13
36LH7	313	204	13
30K12	324	170	16
44LH9	373	298	14
36LH9	442	285	18
44LH11	445	354	16
32LH9	447	256	19
36LH10	486	315	19
40LH11	488	350	18
36LH11	531	343	22
44LH12	552	437	19
36LH12	635	409	25
44LH13	654	518	23
36LH13	747	479	29
44LH14	753	594	26
36LH14	824	527	32
36LH15	868	554	34
44LH15	876	690	31
40LH15	896	639	33
44LH16	1010	793	34
44LH17	1084	848	37
55' LENGTH			
28K6	140	70	8.6

Joist Type	Allowable Loads (PLF) Total	Uniform	Joist Weight (lbs./ft.)
55' LENGTH (Cont.)			
28K7	156	77	9.3
30K7	168	89	9.4
28K8	173	85	9.9
30K8	185	98	10
28K9	188	92	11
30K9	202	106	11
28K10	223	108	12
30K10	240	125	12
40LH8	304	216	13
36LH7	307	197	13
30K12	312	161	16
44LH9	366	287	15
36LH9	434	275	18
40LH10	439	312	17
36LH10	477	304	20
36LH11	521	330	22
32LH11	522	292	24
44LH12	541	421	20
36LH12	624	394	25
44LH13	642	499	23
36LH13	734	462	29
44LH14	739	572	26
36LH14	809	507	32
36LH15	852	534	34
44LH15	860	665	31
40LH15	880	616	33
44LH16	991	765	34
44LH17	1065	817	36
56' LENGTH			
28K6	135	66	8.6
28K7	151	73	9.2
30K7	162	84	9.4
28K8	166	80	9.9
30K8	179	92	10
28K9	181	87	11
30K9	195	100	11
28K10	215	102	12
30K10	231	118	12
30K11	265	135	14
40LH8	298	209	13
30K12	301	153	16
44LH9	359	277	15
36LH9	426	265	18
44LH11	429	329	17
40LH10	431	301	17
36LH10	469	293	21
40LH11	471	326	19
36LH11	512	319	23
44LH12	532	406	20
36LH12	613	380	25
44LH13	631	482	23
40LH13	675	465	26
36LH13	720	445	30
44LH14	726	552	27
32LH14	738	395	33
36LH14	794	489	34
36LH15	837	515	35
44LH15	844	641	30
40LH15	864	594	33
44LH16	974	737	35
44LH17	1046	788	37
57' LENGTH			
30K7	156	80	9.4
30K8	173	88	10
30K9	188	95	11
30K10	223	112	12
30K11	256	128	14
40LH8	293	201	13
48LH10	353	293	15

Joist Type	Allowable Loads (PLF) Total	Uniform	Joist Weight (lbs./ft.)
57' LENGTH (Cont.)			
48LH11	383	316	15
36LH9	418	256	18
44LH11	422	318	17
40LH10	424	290	17
36LH10	461	283	21
36LH11	503	308	22
36LH12	602	367	25
44LH13	619	465	23
40LH13	664	449	26
36LH13	708	430	30
32LH14	713	374	33
36LH14	780	472	34
36LH15	822	497	36
44LH14	829	619	31
40LH15	849	573	33
48LH16	905	737	31
44LH16	956	711	36
44LH17	1027	761	38
58' LENGTH			
30K7	151	76	9.4
30K8	167	83	10
30K9	181	90	11
30K10	215	106	12
30K11	247	121	14
40LH8	288	195	13
44LH9	347	258	15
48LH11	376	305	15
40LH9	378	254	17
44LH10	383	284	16
32LH9	391	208	19
44LH11	414	307	17
40LH10	416	280	18
36LH10	454	273	21
36LH11	495	297	22
36LH12	593	354	25
44LH13	609	449	23
36LH13	697	415	30
44LH14	701	514	28
36LH14	768	456	35
36LH15	809	480	36
44LH15	815	597	31
48LH16	890	712	31
40LH16	919	608	37
44LH16	940	687	37
48LH17	999	796	37
44LH17	1009	734	40
59' LENGTH			
30K7	146	72	9.4
30K8	161	79	10
30K9	175	86	11
30K10	208	101	12
40LH8	283	188	13
48LH10	341	273	14
44LH10	377	274	16
32LH9	379	198	19
44LH11	407	296	17
36LH10	440	260	20
36LH11	480	283	23
36LH12	575	338	25
44LH13	598	434	24
36LH13	675	395	30
44LH14	689	497	28
36LH14	755	434	35
36LH15	795	464	36
44LH15	801	577	31
40LH15	820	535	34
48LH16	874	688	32
40LH16	903	588	37
44LH16	924	664	37

ECONOMICAL JOIST GUIDE
Combined K, VS, LH & DLH Series Load Table

Joist Type	Allowable Loads (PLF) Total	Uniform	Joist Weight (lbs./ft.)
59' LENGTH (Cont.)			
48LH17	982	769	37
44LH17	992	710	39
60' LENGTH			
30K7	141	69	9.4
30K8	156	75	10
30K9	169	81	11
30K10	201	96	12
30K11	231	109	14
40LH8	278	182	13
48LH10	335	264	15
44LH10	370	265	16
44LH11	401	287	17
36LH10	426	248	20
40LH11	439	283	19
36LH11	465	269	23
36LH12	557	322	25
44LH13	588	419	25
36LH13	654	376	30
44LH14	677	480	28
36LH14	729	412	34
48LH15	746	577	28
36LH15	781	448	36
44LH15	788	558	31
48LH16	860	665	32
44LH16	908	642	36
48LH17	965	744	37
44LH17	975	686	39
61' LENGTH			
40LH8	274	176	13
48LH10	330	256	15
44LH10	364	257	16
44LH11	394	277	17
40LH10	396	253	18
36LH10	413	236	21
40LH11	432	274	21
36LH11	451	257	23
44LH12	488	342	21
40LH12	526	334	25
44LH13	579	405	25
40LH13	620	391	28
48LH14	638	487	26
44LH14	666	464	28
48LH15	734	558	29
44LH15	775	540	31
40LH15	793	500	36
48LH16	846	643	33
44LH16	893	621	37
48LH17	949	719	37
44LH17	959	664	39
62' LENGTH			
40LH8	269	170	14
48LH10	324	247	15
44LH10	358	248	17
44LH11	388	268	18
40LH10	389	245	19
36LH10	401	225	21
40LH11	425	265	21
36LH11	438	246	23
44LH12	480	331	21
40LH12	517	323	25
44LH13	569	392	25
40LH13	610	379	29
48LH14	628	472	26
44LH14	655	450	29
52DLH14	736	584	29
44LH15	762	522	31
52DLH15	827	658	32

Joist Type	Allowable Loads (PLF) Total	Uniform	Joist Weight (lbs./ft.)
62' LENGTH (Cont.)			
48LH16	832	623	33
44LH16	879	601	37
52DLH16	892	732	34
48LH17	934	696	37
44LH17	944	642	41
52DLH17	1026	835	40
63' LENGTH			
40LH8	265	165	14
48LH10	319	239	15
40LH9	348	215	18
44LH10	353	240	17
44LH11	381	260	18
40LH10	383	237	19
36LH10	389	215	21
40LH11	418	257	21
36LH11	425	234	23
44LH12	472	321	22
40LH12	509	313	25
44LH13	560	380	25
40LH13	600	367	28
52DLH13	634	506	26
44LH14	645	435	29
52DLH14	724	565	29
44LH15	750	506	31
52DLH15	814	637	32
48LH16	819	603	33
44LH16	865	582	37
52DLH16	878	708	35
48LH17	919	674	38
44LH17	929	622	40
52DLH17	1010	809	40
64' LENGTH			
40LH8	261	160	15
48LH10	314	232	15
40LH9	342	209	18
44LH10	347	233	17
44LH11	375	252	18
40LH10	377	230	19
36LH10	378	206	21
40LH11	412	249	21
48LH12	430	314	19
44LH12	465	311	22
36LH12	493	267	25
44LH13	551	368	25
40LH13	591	355	28
52DLH13	625	490	26
44LH14	635	422	29
52DLH14	713	547	29
44LH15	738	490	31
52DLH15	801	617	32
48LH16	806	584	34
52DLH16	864	686	35
48LH17	905	653	39
44LH17	914	602	43
52DLH17	994	783	40
65' LENGTH			
40LH8	257	155	15
48LH10	309	225	15
44LH10	342	226	17
44LH11	370	244	18
40LH10	371	223	19
40LH11	405	241	21
48LH12	424	305	20
44LH12	458	301	23
36LH12	478	255	25
40LH12	493	294	25
52DLH12	506	392	22

Joist Type	Allowable Loads (PLF) Total	Uniform	Joist Weight (lbs./ft.)
65' LENGTH (Cont.)			
44LH13	543	357	26
40LH13	581	344	28
52DLH13	614	475	26
44LH14	625	409	29
52DLH14	702	531	30
44LH15	727	475	31
52DLH15	789	598	33
52DLH16	851	665	34
44LH17	900	584	43
52DLH17	979	759	40
66' LENGTH			
40LH8	254	150	15
48LH10	305	216	16
44LH10	337	219	17
44LH11	364	237	18
40LH10	367	216	20
40LH11	399	234	22
48LH12	417	295	20
44LH12	451	292	23
40LH12	486	285	25
52DLH12	498	380	23
44LH13	535	346	26
52DLH13	605	461	26
44LH14	615	396	31
52DLH14	691	515	30
44LH15	716	461	31
40LH15	734	427	36
52DLH15	777	580	34
48LH16	781	549	35
52DLH16	838	645	37
44LH17	886	566	43
52DLH17	964	736	40
67' LENGTH			
40LH8	247	144	15
44LH9	300	193	16
40LH9	323	188	18
44LH10	332	212	18
44LH11	359	230	18
56DLH11	422	363	20
44LH12	444	283	23
36LH12	450	232	25
40LH12	472	273	25
52DLH12	491	369	23
44LH13	527	336	26
48LH14	581	404	27
52DLH13	596	447	27
44LH14	606	385	30
40LH14	638	367	34
48LH15	668	462	31
52DLH14	681	499	31
44LH15	705	447	31
40LH15	712	408	36
52DLH15	765	563	34
48LH16	770	533	35
52DLH16	825	626	37
48LH17	864	596	40
44LH17	873	549	44
52DLH17	950	715	40
68' LENGTH			
40LH8	241	138	15
44LH9	296	187	17
40LH9	315	180	18
44LH10	327	206	18
56DLH11	415	352	20
44LH12	437	275	23
40LH12	459	261	25
44LH13	519	326	26

Joist Type	Allowable Loads (PLF) Total	Uniform	Joist Weight (lbs./ft.)
68' LENGTH (Cont.)			
48LH14	572	392	28
52DLH13	587	434	27
44LH14	597	373	30
48LH15	658	449	32
52DLH14	671	485	31
44LH15	695	434	31
52DLH15	754	546	34
48LH16	758	517	36
52DLH16	813	608	37
48LH17	851	578	41
44LH17	860	533	45
52DLH17	935	694	42
69' LENGTH			
40LH8	234	132	15
44LH9	291	182	17
40LH9	306	173	18
44LH10	322	200	18
40LH10	338	190	20
44LH11	348	216	20
56DLH11	409	342	21
44LH12	431	267	23
40LH12	447	251	25
48LH13	478	323	24
44LH13	511	317	29
52DLH13	578	421	27
44LH14	588	363	31
48LH15	648	436	32
52DLH14	661	471	31
44LH15	684	421	31
56DLH15	735	568	32
52DLH15	743	530	34
48LH16	747	502	36
52DLH16	801	590	38
48LH17	839	562	41
44LH17	848	518	45
52DLH17	922	674	44
70' LENGTH			
40LH8	228	127	15
40LH9	298	166	18
44LH10	317	195	18
40LH10	329	183	20
44LH11	343	210	20
36LH11	348	173	23
40LH11	358	198	22
56DLH11	403	332	21
44LH12	425	259	24
40LH12	435	241	25
52DLH12	469	338	24
48LH13	471	313	24
44LH13	504	307	27
48LH14	556	370	29
52DLH13	570	409	29
44LH14	580	352	31
48LH15	639	423	32
52DLH14	652	457	31
44LH15	675	409	31
52DLH15	732	515	34
48LH16	736	488	36
52DLH16	789	573	37
48LH17	827	546	41
44LH17	835	503	45
56DLH17	901	700	40
52DLH17	909	654	44
71' LENGTH			
40LH8	222	122	15
44LH9	283	172	17
40LH9	291	160	18

ECONOMICAL JOIST GUIDE
Combined K, VS, LH & DLH Series Load Table

Joist Type	Allowable Loads (PLF) Total	Uniform	Joist Weight (lbs./ft.)
71' LENGTH (Cont.)			
44LH10	313	189	18
40LH10	321	176	20
44LH11	338	204	20
40LH11	349	190	22
56DLH11	398	323	21
44LH12	419	252	24
40LH12	424	231	25
52DLH12	463	328	24
48LH13	464	305	26
44LH13	497	299	28
40LH13	500	271	30
52DLH13	562	398	28
44LH14	572	342	31
52DLH14	642	444	31
44LH15	665	398	31
52DLH15	722	501	35
52DLH16	778	557	37
48LH17	815	530	41
44LH17	824	489	45
56DLH17	889	680	40
52DLH17	896	636	44
60DLH18	1017	818	46
72' LENGTH			
36LH7	196	95	15
36LH8	215	104	16
40LH8	217	117	16
44LH9	279	167	17
40LH9	283	153	18
44LH10	308	184	18
40LH10	313	169	20
44LH11	333	199	19
56DLH11	392	314	20
44LH12	413	245	25
52DLH12	456	319	24
48LH13	458	296	26
44LH13	490	291	29
52DLH13	554	387	28
44LH14	564	333	31
52DLH14	633	432	31
44LH15	656	387	31
52DLH15	712	487	35
48LH16	716	461	38
52DLH16	767	542	38
44LH17	812	475	45
52DLH17	883	618	44
60DLH18	1003	796	46
73' LENGTH			
40LH8	211	112	15
44LH9	275	162	17
40LH9	276	147	18
44LH10	304	179	18
40LH10	305	162	20
44LH11	329	193	19
56DLH11	387	305	20
44LH12	407	238	25
52DLH12	450	311	24
48LH13	451	288	26
44LH13	483	283	29
52DLH13	546	376	28
44LH14	556	324	31
52DLH14	625	420	32
44LH15	647	376	31
52DLH15	702	474	37
48LH16	706	448	37
52DLH16	757	527	38
44LH17	801	462	47
52DLH17	871	601	44
60DLH18	989	774	46

Joist Type	Allowable Loads (PLF) Total	Uniform	Joist Weight (lbs./ft.)
74' LENGTH			
40LH8	206	108	15
40LH9	269	141	18
44LH9	272	158	18
40LH10	297	156	20
44LH10	300	174	19
56DLH11	381	297	21
44LH12	402	232	25
52DLH12	444	302	24
48LH13	445	280	25
44LH13	477	275	29
48LH14	525	331	29
52DLH13	539	366	29
44LH14	549	315	31
52DLH14	616	409	32
44LH15	639	366	31
60DLH15	669	525	32
52DLH15	692	461	37
52DLH16	747	513	38
48LH17	782	488	45
44LH17	790	450	47
60DLH17	846	667	40
52DLH17	859	585	45
60DLH18	976	753	46
75' LENGTH			
40LH8	201	104	15
44LH9	265	152	18
40LH10	290	150	20
44LH10	293	168	19
56DLH11	376	289	21
44LH12	393	224	25
48LH13	439	273	25
44LH13	466	265	28
48LH14	518	322	29
56DLH13	532	356	29
44LH14	534	302	31
52DLH14	608	398	33
44LH15	623	352	31
60DLH15	660	511	32
52DLH15	683	449	37
48LH16	687	425	39
60DLH16	726	571	35
52DLH16	737	499	40
48LH17	771	475	45
44LH17	780	438	47
60DLH17	834	649	40
52DLH17	848	570	45
60DLH18	963	733	47
76' LENGTH			
40LH8	196	100	15
44LH9	259	146	17
40LH10	283	144	20
44LH10	286	162	19
48LH11	287	177	18
44LH11	310	175	21
52DLH10	353	240	21
44LH12	383	215	25
52DLH11	387	263	23
52DLH12	432	286	26
48LH13	433	266	26
44LH13	454	254	28
48LH14	511	313	30
52DLH13	525	347	30
52DLH14	600	388	34
44LH15	608	339	31
60DLH15	652	497	32
52DLH15	674	437	37
60DLH16	716	556	36
52DLH16	727	486	40
48LH17	761	462	45

Joist Type	Allowable Loads (PLF) Total	Uniform	Joist Weight (lbs./ft.)
76' LENGTH (Cont.)			
44LH17	769	428	47
60DLH17	823	632	41
52DLH17	837	555	45
60DLH18	950	714	47
77' LENGTH			
40LH8	192	97	16
44LH9	253	141	18
44LH10	279	155	19
48LH11	283	172	18
44LH11	302	168	21
44LH12	374	207	25
52DLH11	382	256	24
52DLH12	427	279	26
48LH13	428	259	27
44LH13	444	246	28
52DLH13	518	338	30
40LH15	538	268	36
56DLH14	577	404	32
52DLH14	592	378	34
44LH15	593	326	31
60DLH15	643	484	34
52DLH15	665	425	38
60DLH16	707	541	36
56DLH16	711	508	37
52DLH16	717	473	40
48LH17	751	450	45
52DLH17	826	540	46
60DLH18	938	695	47
78' LENGTH			
40LH8	187	93	16
44LH9	247	136	18
44LH10	272	150	19
48LH11	279	168	18
44LH11	295	162	21
44LH12	365	200	25
52DLH11	377	249	24
52DLH12	421	272	26
48LH13	422	252	26
44LH13	433	236	28
52DLH13	511	329	30
40LH15	524	258	36
56DLH14	569	394	32
52DLH14	585	368	34
52DLH15	657	415	38
48LH16	661	393	40
60DLH16	698	528	38
56DLH16	702	495	38
52DLH16	708	461	41
48LH17	742	439	45
52DLH17	815	526	45
60DLH18	926	677	46
79' LENGTH			
40LH8	183	90	15
44LH9	242	131	18
44LH10	266	144	19
48LH11	276	164	18
44LH11	289	157	21
52DLH10	339	222	22
44LH12	356	192	25
52DLH11	372	243	24
52DLH12	416	265	26
48LH13	417	246	26
44LH13	423	228	29
52DLH13	505	321	30
56DLH14	562	384	31
52DLH14	577	359	34
52DLH15	648	404	38

Joist Type	Allowable Loads (PLF) Total	Uniform	Joist Weight (lbs./ft.)
79' LENGTH (Cont.)			
48LH16	652	383	40
60DLH16	689	514	38
56DLH16	693	482	38
52DLH16	699	450	41
48LH17	732	428	45
64DLH17	788	622	41
60DLH17	792	585	44
52DLH17	805	513	48
60DLH18	914	660	47
80' LENGTH			
40LH8	178	86	15
40LH9	233	113	18
44LH9	236	127	18
40LH10	255	124	20
44LH10	260	139	19
48LH11	272	160	18
44LH11	282	151	21
52DLH10	335	217	22
44LH12	347	185	25
52DLH11	368	237	24
52DLH12	410	258	26
48LH13	412	240	26
44LH13	413	220	29
48LH14	486	283	32
52DLH13	498	313	31
60DLH14	527	380	30
56DLH14	555	374	32
52DLH14	570	350	35
52DLH15	640	394	38
64DLH16	675	533	35
60DLH16	680	501	38
56DLH16	684	470	38
52DLH16	690	438	41
48LH17	723	417	47
60DLH17	782	570	44
52DLH17	795	500	48
60DLH18	903	644	48
81' LENGTH			
44LH9	231	122	18
44LH10	254	134	19
48LH11	269	156	18
44LH11	276	146	21
52DLH10	331	211	22
44LH12	339	179	25
48LH12	340	196	23
52DLH11	363	231	23
52DLH12	405	252	26
48LH13	407	234	27
48LH14	480	276	32
52DLH13	492	305	31
56DLH14	548	365	32
52DLH14	563	341	35
52DLH15	632	384	38
64DLH16	667	520	36
60DLH16	672	489	38
52DLH16	682	428	42
48LH17	714	407	47
64DLH17	769	592	41
52DLH17	785	488	48
64DLH18	888	669	47
60DLH18	891	628	53
68DLH19	998	803	52
82' LENGTH			
44LH9	226	118	18
44LH10	249	130	19
44LH11	269	140	21
44LH12	331	172	25

ECONOMICAL JOIST GUIDE
Combined K, VS, LH & DLH Series Load Table

Joist Type	Allowable Loads (PLF) Total	Uniform	Joist Weight (lbs./ft.)
82' LENGTH (Cont.)			
52DLH11	359	225	24
52DLH12	400	246	27
48LH13	402	228	28
44LH14	446	231	31
52DLH13	486	298	31
60DLH14	514	362	31
44LH15	524	271	31
52DLH14	556	333	35
60DLH15	604	427	34
52DLH15	624	375	39
64DLH16	659	508	36
60DLH16	664	477	38
52DLH16	673	417	44
48LH17	706	397	47
52DLH17	775	476	48
64DLH18	877	653	46
60DLH18	880	613	53
68DLH19	986	783	52
83' LENGTH			
44LH9	221	114	18
44LH10	243	125	19
44LH11	264	136	21
44LH12	323	166	25
48LH12	329	185	24
52DLH11	354	220	25
52DLH12	396	240	27
44LH14	436	223	31
60DLH13	457	332	28
56DLH13	473	311	30
52DLH13	480	291	32
60DLH14	508	353	30
44LH15	512	261	31
52DLH14	549	325	35
60DLH15	596	417	34
56DLH15	611	392	37
60DLH16	656	466	38
52DLH16	665	407	44
48LH17	690	383	47
60DLH17	754	529	45
52DLH17	766	465	48
64DLH18	866	637	48
60DLH18	870	598	53
68DLH19	974	765	54
84' LENGTH			
44LH9	216	110	18
44LH10	238	121	19
44LH11	258	131	21
44LH12	315	160	25
52DLH10	319	196	23
48LH12	322	179	24
52DLH11	350	215	25
52DLH12	391	234	27
44LH14	425	215	31
56DLH13	467	304	30
52DLH13	475	284	32
44LH15	500	252	31
60DLH14	502	345	31
48LH15	521	287	36
52DLH14	543	317	37
60DLH15	589	407	34
56DLH15	604	383	38
60DLH16	648	455	39
52DLH16	657	397	44
48LH17	675	371	47
60DLH17	745	517	45
56DLH17	751	485	46
52DLH17	757	454	52
64DLH18	856	622	48
60DLH18	859	584	53

Joist Type	Allowable Loads (PLF) Total	Uniform	Joist Weight (lbs./ft.)
84' LENGTH (Cont.)			
68DLH19	962	746	54
85' LENGTH			
44LH9	211	108	18
44LH10	233	117	19
44LH11	252	127	21
44LH12	308	155	25
52DLH10	315	192	24
52DLH11	346	210	25
52DLH12	386	229	27
44LH14	415	207	31
56DLH13	462	297	30
52DLH13	469	277	32
44LH15	488	243	31
60DLH14	496	336	31
48LH15	510	278	36
52DLH14	536	310	37
60DLH15	582	397	34
56DLH15	596	374	38
60DLH16	640	444	39
56DLH16	644	416	41
52DLH16	650	388	45
48LH17	660	358	47
72DLH17	690	564	38
60DLH17	736	505	45
56DLH17	742	474	46
52DLH17	748	443	52
64DLH18	846	607	47
60DLH18	849	570	53
68DLH19	951	729	54
86' LENGTH			
44LH9	207	103	18
44LH10	228	113	19
44LH11	247	123	21
44LH12	300	149	25
52DLH10	312	187	24
52DLH11	342	205	26
52DLH12	382	223	27
44LH14	406	200	31
56DLH13	456	290	30
52DLH13	463	271	33
60DLH14	490	329	32
48LH15	499	269	36
52DLH14	530	302	37
60DLH15	575	388	36
56DLH15	589	365	38
52DLH15	595	341	41
68DLH16	626	488	37
64DLH16	628	461	38
60DLH16	633	434	40
56DLH16	636	407	41
52DLH16	642	379	45
48LH17	646	346	47
72DLH17	682	551	38
60DLH17	727	493	45
56DLH17	733	463	48
52DLH17	739	433	52
68DLH18	816	627	46
60DLH18	839	557	53
68DLH19	940	712	54
87' LENGTH			
44LH9	202	99	18
44LH10	223	110	19
44LH11	242	119	21
44LH12	293	144	25
52DLH10	308	183	24
52DLH11	338	200	26
52DLH12	377	218	27

Joist Type	Allowable Loads (PLF) Total	Uniform	Joist Weight (lbs./ft.)
87' LENGTH (Cont.)			
44LH14	396	193	31
48LH14	425	227	32
56DLH13	451	283	31
52DLH13	458	264	33
44LH15	466	227	31
60DLH14	485	321	32
48LH15	488	260	36
52DLH14	524	295	37
64DLH15	552	403	35
56DLH15	583	357	38
52DLH15	588	333	41
64DLH16	621	451	38
56DLH16	629	397	41
52DLH16	635	370	45
72DLH17	674	538	39
60DLH17	719	482	46
56DLH17	725	452	48
52DLH17	730	423	52
68DLH18	807	613	46
60DLH18	830	544	53
68DLH19	929	696	54
88' LENGTH			
44LH9	198	96	18
44LH10	218	106	19
44LH11	236	115	21
44LH12	287	139	25
52DLH10	305	179	23
52DLH11	334	196	26
52DLH12	373	213	27
44LH14	387	187	31
48LH14	416	220	32
56DLH13	446	277	31
52DLH13	453	258	33
44LH15	455	219	31
60DLH14	479	314	32
52DLH14	518	289	37
64DLH15	545	393	35
60DLH15	562	370	37
56DLH15	582	325	41
64DLH16	614	440	38
52DLH16	627	362	45
72DLH17	666	526	41
60DLH17	711	471	46
56DLH17	716	442	48
52DLH17	722	413	52
72DLH18	780	594	47
68DLH18	797	599	48
60DLH18	820	532	53
72DLH19	915	674	54
68DLH19	918	680	56
89' LENGTH			
48LH10	212	112	18
48LH11	229	120	20
52DLH10	301	175	23
52DLH11	330	191	26
52DLH12	369	209	28
48LH14	407	212	32
52DLH13	448	253	33
60DLH14	474	307	32
52DLH14	512	282	38
64DLH15	539	385	34
60DLH15	556	362	37
52DLH15	575	318	41
64DLH16	607	431	38
60DLH16	611	405	40
52DLH16	620	354	45
72DLH17	659	514	41
60DLH17	703	460	46
56DLH17	708	432	49

Joist Type	Allowable Loads (PLF) Total	Uniform	Joist Weight (lbs./ft.)
89' LENGTH (Cont.)			
52DLH17	714	404	52
72DLH18	771	581	47
68DLH18	788	586	48
60DLH18	811	520	53
72DLH19	905	659	54
68DLH19	908	665	55
90' LENGTH			
48LH10	208	108	18
48LH11	225	117	20
52DLH10	298	171	24
52DLH11	327	187	26
48LH13	338	175	29
52DLH12	365	204	29
48LH14	399	206	32
60DLH13	422	282	30
56DLH13	436	265	31
52DLH13	443	247	34
60DLH14	468	300	32
52DLH14	507	276	38
64DLH15	533	376	34
60DLH15	550	354	37
64DLH16	600	421	39
60DLH16	604	396	40
52DLH16	614	346	45
72DLH17	651	503	40
60DLH17	695	450	46
72DLH18	763	568	46
68DLH18	780	573	48
60DLH18	802	508	53
72DLH19	894	644	54
68DLH19	898	650	55
91' LENGTH			
48LH10	204	105	18
48LH11	220	113	20
52DLH10	291	165	24
52DLH11	320	181	26
48LH13	332	170	29
52DLH12	357	197	29
48LH14	390	199	32
60DLH13	417	276	30
52DLH13	433	239	33
48LH15	448	228	36
64DLH14	460	313	32
60DLH14	463	293	34
52DLH14	497	266	38
64DLH15	527	368	35
60DLH15	544	346	37
64DLH16	593	412	39
60DLH16	598	387	42
52DLH16	601	335	45
60DLH17	687	440	46
72DLH18	754	555	46
67DLH18	771	560	48
60DLH18	793	497	53
72DLH19	885	630	54
68DLH19	888	636	55
92' LENGTH			
48LH10	200	102	18
48LH11	216	110	20
52DLH10	285	159	24
52DLH11	313	174	26
48LH13	325	164	29
52DLH12	349	191	29
56DLH12	352	209	27
48LH14	383	193	32
60DLH13	412	270	30
52DLH13	424	231	33

ECONOMICAL JOIST GUIDE
Combined K, VS, LH & DLH Series Load Table

Joist Type	Allowable Loads (PLF) Total	Uniform	Joist Weight (lbs./ft.)
92' LENGTH (Cont.)			
56DLH13	427	253	32
48LH15	439	221	36
60DLH14	458	287	34
52DLH14	486	258	38
64DLH15	521	360	35
60DLH15	538	339	38
52DLH15	545	291	42
56DLH15	551	319	41
60DLH16	591	379	42
56DLH16	595	355	45
60DLH17	680	431	46
72DLH18	746	543	46
68DLH18	763	548	48
60DLH18	784	486	53
68DLH19	878	622	55
93' LENGTH			
48LH10	196	99	18
48LH11	212	106	20
52DLH10	279	154	23
52DLH11	306	169	26
48LH13	318	159	29
52DLH12	342	185	29
56DLH12	349	204	27
48LH14	375	187	32
52DLH13	414	224	33
48LH15	430	214	36
60DLH14	453	281	34
52DLH14	476	249	38
56DLH14	477	277	37
60DLH15	532	332	38
52DLH15	533	282	42
56DLH15	545	312	41
68DLH16	578	417	38
60DLH16	585	371	42
56DLH16	588	348	45
64DLH17	669	448	46
60DLH17	672	421	49
56DLH17	678	395	51
68DLH18	754	536	48
64DLH18	773	507	53
60DLH18	776	476	56
68DLH19	869	609	54
94' LENGTH			
48LH10	192	96	18
48LH11	208	103	20
52DLH10	273	150	23
52DLH11	299	164	26
48LH13	312	154	29
52DLH12	334	179	29
56DLH12	345	200	27
48LH14	367	181	32
52DLH13	406	216	33
48LH15	422	208	36
60DLH14	448	275	34
52DLH14	466	242	37
52DLH14	472	271	37
60DLH15	526	325	38
56DLH15	539	306	41
68DLH16	572	408	38
60DLH16	579	363	41
56DLH16	582	340	45
72DLH17	623	461	42
60DLH17	665	412	49
56DLH17	670	387	51
72DLH18	730	520	47
60DLH18	768	466	55
72DLH19	856	590	55
68DLH19	859	596	58

Joist Type	Allowable Loads (PLF) Total	Uniform	Joist Weight (lbs./ft.)
95' LENGTH			
48LH10	188	93	18
48LH11	204	100	20
52DLH10	267	145	23
52DLH11	293	158	26
52DLH12	327	173	29
56DLH12	341	196	27
48LH14	360	176	32
52DLH13	397	209	33
60DLH13	399	253	31
48LH15	413	201	36
60DLH14	444	269	34
52DLH14	457	234	37
56DLH14	467	265	37
68DLH15	477	340	34
60DLH15	521	318	38
56DLH15	533	299	41
68DLH16	566	400	38
64DLH16	568	378	41
60DLH16	573	355	44
56DLH16	576	333	45
72DLH17	617	451	42
60DLH17	658	404	48
56DLH17	663	379	51
72DLH18	723	509	48
60DLH18	760	456	56
72DLH19	847	578	55
68DLH19	850	583	60
96' LENGTH			
48LH10	185	90	18
48LH11	200	91	20
52DLH10	261	140	24
52DLH11	287	153	26
48LH13	300	145	29
52DLH12	320	168	29
60DLH12	325	205	27
56DLH12	338	192	29
48LH14	353	171	32
52DLH13	389	203	33
60DLH13	395	248	32
48LH15	405	195	36
64DLH14	436	281	32
60DLH14	439	264	34
52DLH14	447	227	38
56DLH14	462	260	38
60DLH15	515	311	38
48LH17	525	252	47
64DLH16	562	370	41
60DLH16	567	348	44
56DLH16	570	326	45
72DLH17	610	442	42
64DLH17	648	421	46
60DLH17	651	395	49
56DLH17	656	371	51
72DLH18	715	499	48
64DLH18	748	476	53
60DLH18	752	447	57
72DLH19	838	566	55
68DLH19	841	571	60
97' LENGTH			
52DLH10	256	136	24
52DLH11	281	149	26
52DLH12	314	163	29
60DLH12	322	201	27
56DLH12	334	188	28
52DLH13	381	197	33
60DLH13	391	243	32
60DLH14	434	258	34
52DLH14	438	220	38
56DLH14	457	254	38

Joist Type	Allowable Loads (PLF) Total	Uniform	Joist Weight (lbs./ft.)
97' LENGTH (Cont.)			
64DLH15	494	324	37
60DLH15	510	305	40
72DLH16	537	380	38
64DLH16	557	362	42
60DLH16	561	341	44
72DLH17	604	433	42
64DLH17	641	412	46
56DLH17	650	363	51
72DLH18	708	488	48
64DLH18	741	466	53
60DLH18	744	437	59
72DLH19	830	554	55
68DLH19	833	559	60
98' LENGTH			
52DLH10	251	132	24
52DLH11	275	144	26
52DLH12	307	158	29
60DLH12	318	197	27
56DLH12	331	184	30
52DLH13	373	191	33
60DLH13	387	238	32
56DLH13	401	223	34
60DLH14	430	253	34
56DLH14	453	249	38
64DLH15	489	317	37
60DLH15	505	298	40
72DLH16	531	373	39
64DLH16	551	355	42
60DLH16	555	334	44
56DLH16	559	313	46
72DLH17	598	424	43
64DLH17	635	404	46
56DLH17	643	356	51
72DLH18	700	478	48
64DLH18	733	456	53
60DLH18	736	428	59
72DLH19	821	543	55
68DLH19	824	548	60
99' LENGTH			
52DLH10	246	128	24
52DLH11	270	140	26
52DLH12	301	153	29
60DLH12	315	193	27
56DLH12	324	178	29
52DLH13	366	185	33
60DLH13	383	233	33
56DLH13	394	216	33
60DLH14	426	248	34
56DLH14	444	242	38
64DLH15	484	311	37
60DLH15	500	292	40
64DLH16	545	348	42
60DLH16	549	327	44
72DLH17	592	415	43
64DLH17	628	395	46
56DLH17	630	345	51
72DLH18	693	469	48
64DLH18	726	447	53
60DLH18	729	420	59
72DLH19	813	532	58
68DLH19	816	537	61
100' LENGTH			
52DLH10	241	124	24
52DLH11	264	135	26
52DLH12	295	149	29
60DLH12	312	189	27
56DLH12	318	173	29

Joist Type	Allowable Loads (PLF) Total	Uniform	Joist Weight (lbs./ft.)
100' LENGTH (Cont.)			
52DLH13	358	180	33
60DLH13	379	228	32
56DLH13	386	209	33
52DLH14	413	201	37
60DLH14	421	243	35
56DLH14	435	234	38
64DLH15	480	304	37
60DLH15	495	287	41
72DLH16	521	358	39
60DLH16	544	320	45
72DLH17	586	407	44
64DLH17	622	388	49
72DLH18	686	459	48
64DLH18	718	438	55
60DLH18	721	411	59
72DLH19	805	521	58
68DLH19	808	526	61
101' LENGTH			
52DLH10	236	120	23
52DLH11	259	132	26
56DLH12	289	144	29
60DLH12	309	185	27
56DLH12	312	168	29
52DLH13	351	174	33
60DLH13	375	224	32
56DLH13	379	204	33
52DLH14	405	194	37
60DLH14	417	238	35
56DLH14	427	228	37
68DLH15	449	301	35
64DLH15	475	298	39
60DLH15	490	281	41
60DLH16	538	314	46
72DLH17	580	399	44
64DLH17	616	380	49
60DLH17	619	357	52
72DLH18	679	450	51
64DLH18	711	430	56
60DLH18	714	403	59
72DLH19	797	511	60
68DLH19	800	516	61
102' LENGTH			
52DLH10	231	116	23
52DLH11	254	128	26
52DLH12	284	140	29
56DLH12	306	163	29
52DLH13	344	170	33
64DLH13	358	232	31
60DLH13	372	219	34
52DLH14	397	189	37
60DLH14	413	233	35
56DLH14	419	221	38
68DLH15	445	295	35
64DLH15	470	292	39
60DLH15	485	275	41
60DLH16	533	308	46
72DLH17	574	391	45
64DLH17	610	372	49
60DLH17	613	350	52
72DLH18	673	442	51
60DLH18	707	395	59
72DLH19	789	501	60
68DLH19	792	506	61
103' LENGTH			
52DLH10	227	114	24
52DLH11	249	124	26
52DLH12	278	135	29

Joist Type	Allowable Loads (PLF) Total	Uniform	Joist Weight (lbs./ft.)
103' LENGTH (Cont.)			
60DLH12	303	178	28
52DLH13	338	164	33
64DLH13	355	228	32
60DLH13	368	215	34
52DLH14	390	184	38
64DLH14	406	244	34
60DLH14	409	229	37
56DLH14	411	214	38
68DLH15	440	289	35
64DLH15	466	287	39
60DLH15	480	270	41
68DLH16	522	340	41
60DLH16	528	302	46
72DLH17	569	384	45
68DLH17	588	386	47
60DLH17	607	343	52
64DLH18	697	413	56
60DLH18	700	388	59
72DLH19	781	491	60
68DLH19	784	496	61
104' LENGTH			
52DLH10	223	110	24
52DLH11	244	120	26
52DLH12	273	132	29
56DLH12	295	153	30
60DLH12	300	175	29
52DLH13	331	159	33
64DLH13	351	224	32
56DLH13	358	186	34
60DLH13	365	211	34
52DLH14	382	178	38
64DLH14	402	239	34
60DLH14	405	224	37
64DLH15	461	281	39
60DLH15	476	265	43
72DLH16	501	331	40
68DLH16	517	333	41
60DLH16	523	296	46
72DLH17	563	376	45
68DLH17	583	379	46
60DLH17	601	337	52
72DLH18	660	425	53
68DLH18	674	428	53
60DLH18	694	380	59
68DLH19	777	486	61
105' LENGTH			
56DLH11	253	136	26
56DLH12	289	150	29
60DLH12	297	171	29
64DLH13	348	219	32
56DLH13	351	181	34
60DLH13	361	207	34
64DLH14	398	235	34
60DLH14	401	220	37
68DLH15	432	278	37
64DLH15	457	276	40
60DLH15	471	260	43
72DLH16	496	324	40
68DLH16	512	327	42
60DLH16	518	290	45
68DLH17	577	372	46
60DLH17	595	330	52
68DLH18	668	420	53
60DLH18	687	373	59
68DLH19	769	477	61
106' LENGTH			
56DLH11	248	133	26
56DLH12	284	145	29
60DLH12	295	168	29
56DLH13	344	175	34
60DLH13	358	203	34
64DLH14	395	230	34
60DLH14	398	216	37
68DLH15	428	273	37
64DLH15	452	271	40
60DLH15	467	255	43
72DLH16	491	318	41
64DLH16	509	303	45
60DLH16	513	285	46
68DLH17	572	365	46
60DLH17	590	324	52
68DLH18	662	412	53
60DLH18	681	366	59
68DLH19	762	468	60
107' LENGTH			
56DLH11	244	129	36
56DLH12	278	141	29
60DLH12	289	163	29
60DLH13	351	197	34
64DLH14	391	226	34
68DLH15	424	268	38
64DLH15	448	266	40
60DLH15	458	248	43
72DLH16	487	312	41
64DLH16	504	298	46
72DLH17	548	355	46
68DLH17	566	358	49
60DLH17	579	315	52
64DLH17	581	338	52
68DLH18	655	405	53
60DLH18	668	357	59
64DLH18	671	383	59
68DLH19	755	459	61
108' LENGTH			
56DLH11	239	125	26
56DLH12	273	137	29
60DLH12	284	158	29
60DLH13	345	191	34
60DLH14	383	205	37
64DLH14	387	222	36
72DLH15	417	260	36
68DLH15	420	263	38
64DLH15	444	261	40
60DLH15	450	242	43
72DLH16	482	307	41
64DLH16	500	292	46
72DLH17	542	349	46
60DLH17	569	306	52
64DLH17	576	332	52
60DLH18	656	346	59
64DLH18	665	376	59
72DLH19	745	447	61
68DLH19	748	451	61
109' LENGTH			
56DLH11	235	122	26
56DLH12	268	133	29
60DLH12	279	154	29
56DLH13	325	161	33
60DLH13	339	187	34
60DLH14	376	199	37
64DLH14	384	218	37
72DLH15	413	255	36
68DLH15	416	258	38
64DLH15	440	256	41
60DLH15	442	235	43
72DLH16	478	301	41
64DLH16	495	287	46
72DLH17	537	342	47
60DLH17	558	298	52
64DLH17	571	326	52
60DLH18	644	337	59
64DLH18	659	369	59
72DLH19	738	439	61
68DLH19	741	443	67
110' LENGTH			
56DLH11	231	118	26
60DLH12	274	150	29
60DLH13	333	181	34
60DLH14	370	193	37
64DLH14	380	214	37
72DLH15	409	251	36
68DLH15	412	254	38
60DLH15	434	228	43
64DLH15	436	251	41
72DLH16	473	295	41
60DLH16	476	255	46
64DLH16	491	281	46
72DLH17	533	336	47
60DLH17	548	290	52
68DLH17	551	338	49
64DLH17	565	320	52
60DLH18	632	327	59
68DLH18	637	383	56
64DLH18	653	362	59
72DLH19	731	431	61
68DLH19	734	434	67
111' LENGTH			
56DLH11	227	115	26
56DLH12	259	126	30
60DLH12	270	146	29
64DLH12	271	161	28
56DLH13	314	152	34
60DLH13	327	176	34
64DLH13	329	196	33
60DLH14	363	189	37
64DLH14	377	210	37
68DLH15	408	249	38
64DLH15	432	247	41
56DLH16	436	214	46
64DLH16	486	276	46
72DLH17	528	330	47
68DLH17	546	332	49
64DLH17	560	314	52
72DLH18	618	373	53
60DLH18	621	319	59
64DLH18	647	356	59
72DLH19	725	423	61
68DLH19	727	427	67
112' LENGTH			
56DLH11	223	113	26
56DLH12	254	123	29
60DLH12	265	142	29
64DLH12	269	159	29
56DLH13	308	149	33
60DLH13	322	171	34
64DLH13	326	193	34
60DLH14	356	183	37
64DLH14	373	206	37
68DLH15	405	245	38
64DLH15	428	242	41
64DLH16	482	271	46
72DLH17	523	324	47
64DLH17	555	309	52
72DLH18	613	366	53
64DLH18	641	349	59
72DLH19	718	415	61
68DLH19	721	419	67
113' LENGTH			
60DLH12	261	138	29
64DLH12	266	156	29
60DLH13	316	167	34
64DLH13	323	189	34
60DLH14	350	178	37
64DLH14	370	203	37
68DLH15	401	240	39
64DLH15	424	238	41
60DLH16	451	235	46
72DLH16	461	280	43
68DLH16	476	282	45
72DLH17	518	318	47
60DLH17	519	267	52
64DLH17	550	303	52
72DLH18	607	360	53
64DLH18	636	343	59
72DLH19	712	408	62
68DLH19	714	412	67
114' LENGTH			
60DLH12	256	134	29
64DLH12	264	153	29
60DLH13	311	163	34
64DLH13	321	186	34
60DLH14	344	173	37
64DLH14	367	199	37
68DLH15	398	236	39
60DLH15	405	205	43
64DLH15	421	234	43
60DLH16	444	228	46
72DLH16	457	275	43
68DLH16	472	277	46
64DLH16	474	262	46
72DLH17	514	313	50
64DLH17	546	298	52
60DLH18	589	394	59
64DLH18	630	337	59
72DLH19	706	401	64
68DLH19	708	404	67
115' LENGTH			
60DLH12	252	131	29
64DLH12	259	150	29
60DLH13	306	158	34
64DLH13	315	181	34
60DLH14	338	170	37
64DLH14	360	193	37
68DLH15	394	232	39
60DLH15	398	200	43
64DLH15	414	228	43
72DLH16	453	270	43
68DLH16	467	272	46
72DLH17	509	307	50
64DLH17	536	290	52
60DLH18	578	286	59
72DLH18	597	347	54
64DLH18	619	328	59
68DLH19	702	397	66
116' LENGTH			
60DLH12	248	128	29

ECONOMICAL JOIST GUIDE
Combined K, VS, LH & DLH Series Load Table

Joist Type	Allowable Loads (PLF) Total	Uniform	Joist Weight (lbs./ft.)
116' LENGTH (Cont.)			
64DLH12	255	146	29
60DLH13	301	154	34
64DLH13	310	176	34
60DLH14	332	165	37
64DLH14	354	189	37
68DLH15	391	228	39
60DLH15	392	194	43
64DLH15	407	223	43
60DLH16	428	217	46
68DLH16	463	268	46
60DLH17	493	247	52
72DLH17	505	302	50
64DLH17	527	283	52
60DLH18	568	279	59
64DLH18	608	320	59
68DLH19	696	391	66
117' LENGTH			
60DLH12	244	124	29
64DLH12	251	142	29
60DLH13	296	151	34
64DLH13	305	171	34
60DLH14	327	161	37
64DLH14	349	184	37
72DLH15	385	222	38
68DLH15	387	224	41
64DLH15	400	217	43
60DLH16	421	211	46
64DLH16	450	242	46
68DLH16	459	263	46
60DLH17	484	241	52
72DLH17	501	297	50
64DLH17	518	275	52
60DLH18	559	272	59
64DLH18	598	311	59
68DLH18	599	388	60
72DLH19	687	381	67
68DLH19	690	384	67
118' LENGTH			
60DLH12	240	121	29
64DLH12	247	138	29
60DLH13	291	147	34
60DLH14	321	156	37
64DLH14	343	179	37
72DLH15	382	218	38
68DLH15	384	220	41
64DLH15	394	211	43
60DLH16	414	206	46
72DLH16	441	257	45
68DLH16	456	259	46
72DLH17	496	292	50
64DLH17	509	268	52
68DLH17	513	294	53
60DLH18	549	266	59
64DLH18	587	304	59
68DLH18	594	333	60
72DLH19	682	374	67
68DLH19	684	377	67
119' LENGTH			
60DLH12	236	118	29
64DLH12	243	135	29
60DLH13	286	143	34
64DLH13	295	163	34
60DLH14	316	152	37
64DLH14	337	174	37
68DLH14	340	193	38
72DLH15	378	214	38
68DLH15	381	217	40

Joist Type	Allowable Loads (PLF) Total	Uniform	Joist Weight (lbs./ft.)
119' LENGTH (Cont.)			
64DLH15	387	206	43
60DLH16	407	201	46
72DLH16	437	252	45
68DLH16	452	254	46
72DLH17	492	287	49
64DLH17	501	262	52
68DLH17	509	289	53
60DLH18	540	259	59
64DLH18	578	296	59
68DLH18	589	327	60
72DLH19	676	368	67
68DLH19	678	371	67
120' LENGTH			
60DLH12	232	115	29
64DLH12	239	132	29
60DLH13	282	139	34
64DLH13	291	159	34
60DLH14	310	149	37
64DLH14	332	171	37
68DLH14	337	190	38
72DLH15	375	211	38
68DLH15	378	213	40
64DLH15	381	201	43
60DLH16	400	196	46
72DLH16	434	248	45
68DLH16	448	250	46
72DLH17	488	282	49
64DLH17	492	255	52
68DLH17	505	284	53
60DLH18	531	252	59
64DLH18	568	288	59
68DLH18	584	321	60
68DLH19	673	365	67
121' LENGTH			
64DLH12	235	129	29
64DLH13	286	155	34
64DLH14	326	166	37
68DLH14	334	187	38
72DLH15	372	207	40
68DLH15	375	209	40
72DLH16	430	244	45
68DLH16	444	246	49
72DLH17	484	278	49
68DLH17	501	280	53
64DLH18	559	282	59
68DLH18	579	316	60
68DLH19	667	359	67
122' LENGTH			
64DLH12	231	125	29
64DLH13	281	152	34
68DLH13	288	171	35
64DLH14	321	162	37
68DLH14	332	185	38
72DLH15	369	204	40
68DLH15	372	206	42
72DLH16	427	240	45
68DLH16	441	242	49
64DLH17	476	243	52
68DLH17	497	275	53
64DLH18	549	274	59
68DLH18	575	311	60
72DLH19	659	350	67
68DLH19	662	353	67
123' LENGTH			
64DLH12	228	122	29

Joist Type	Allowable Loads (PLF) Total	Uniform	Joist Weight (lbs./ft.)
123' LENGTH (Cont.)			
64DLH13	277	148	34
68DLH13	284	168	35
64DLH14	316	158	37
68DLH14	327	179	38
68DLH15	365	201	42
72DLH15	366	200	41
72DLH16	423	236	45
68DLH16	433	236	49
64DLH17	468	237	52
68DLH17	489	268	53
64DLH18	540	267	59
68DLH18	566	304	60
72DLH19	654	344	67
124' LENGTH			
64DLH12	224	119	29
64DLH13	273	144	34
68DLH13	279	164	35
64DLH14	311	154	37
68DLH14	322	175	38
68DLH15	360	196	42
72DLH15	363	197	41
64DLH16	401	203	46
72DLH16	420	232	47
68DLH16	427	230	49
64DLH17	461	231	52
68DLH17	481	262	53
64DLH18	532	261	59
68DLH18	557	297	60
72DLH19	649	339	68
125' LENGTH			
64DLH12	221	216	29
64DLH13	269	141	34
64DLH14	306	151	37
68DLH14	317	171	38
68DLH15	354	191	41
72DLH15	360	194	41
64DLH16	394	198	46
72DLH16	416	229	47
68DLH16	420	225	49
64DLH17	454	226	52
68DLH17	474	256	53
64DLH18	523	255	59
68DLH18	549	289	60
72DLH19	643	333	67
126' LENGTH			
64DLH12	218	114	29
64DLH13	264	131	34
64DLH14	301	147	37
68DLH14	312	167	38
72DLH15	357	191	41
64DLH16	388	193	46
72DLH16	413	225	47
64DLH17	446	220	52
68DLH17	467	249	53
64DLH18	515	249	59
68DLH18	540	283	60
72DLH18	544	289	59
72DLH19	638	328	67
127' LENGTH			
64DLH12	214	111	29
64DLH13	260	134	34
64DLH14	296	143	37
68DLH14	308	163	38
72DLH14	309	168	37
68DLH15	343	182	41

Joist Type	Allowable Loads (PLF) Total	Uniform	Joist Weight (lbs./ft.)
127' LENGTH (Cont.)			
72DLH15	354	188	41
64DLH16	382	189	46
72DLH16	410	221	47
64DLH17	439	215	52
72DLH17	461	252	53
64DLH18	507	243	59
68DLH18	532	276	60
72DLH18	540	284	59
72DLH19	633	323	67
128' LENGTH			
64DLH12	211	109	29
64DLH13	257	131	34
64DLH14	292	140	37
68DLH14	303	159	38
72DLH14	307	166	37
68DLH15	337	178	41
72DLH15	352	185	41
64DLH16	376	185	46
72DLH16	407	218	47
64DLH17	432	210	52
68DLH17	453	238	53
72DLH17	457	248	53
64DLH18	499	237	59
68DLH18	524	269	60
72DLH18	536	280	59
68DLH19	601	305	67
72DLH19	628	318	67
129' LENGTH			
68DLH13	259	145	35
68DLH14	299	155	38
72DLH14	305	163	38
72DLH15	349	182	41
72DLH16	403	215	49
68DLH17	446	232	53
72DLH17	454	244	53
68DLH18	516	263	60
72DLH18	532	276	59
72DLH19	623	313	67
130' LENGTH			
68DLH13	255	142	35
68DLH14	294	152	38
72DLH14	303	171	38
72DLH15	347	191	41
72DLH16	401	225	49
68DLH17	439	228	55
72DLH17	451	256	56
68DLH18	508	257	60
72DLH18	528	289	59
68DLH19	583	291	67
72DLH19	619	328	70
131' LENGTH			
68DLH13	252	138	35
68DLH14	290	148	38
72DLH14	298	167	38
68DLH15	322	166	41
72DLH15	342	187	43
72DLH16	395	219	49
68DLH17	433	222	53
72DLH17	445	250	53
68DLH18	501	251	59
72DLH18	520	283	59
68DLH19	574	285	67
72DLH19	609	321	70

ECONOMICAL JOIST GUIDE
Combined K, VS, LH & DLH Series Load Table

Joist Type	Allowable Loads (PLF) Total	Uniform	Joist Weight (lbs./ft.)
132' LENGTH			
68DLH13	248	135	35
68DLH14	286	145	38
72DLH14	294	163	38
68DLH15	317	162	41
72DLH15	336	183	43
68DLH16	376	190	49
72DLH16	390	214	49
68DLH17	427	217	53
72DLH17	438	245	56
68DLH18	493	246	59
72DLH18	512	276	59
68DLH19	565	278	67
72DLH19	600	313	70
133' LENGTH			
68DLH13	244	133	35
68DLH14	281	141	38
72DLH14	290	159	38
68DLH15	312	158	41
72DLH15	331	178	41
68DLH16	371	186	49
72DLH16	384	209	49
68DLH17	420	212	53
72DLH17	432	239	56
68DLH18	486	240	59
72DLH18	505	270	59
68DLH19	557	272	67
72DLH19	591	306	70
134' LENGTH			
68DLH13	241	130	35
68DLH14	277	138	38
72DLH14	285	155	38
68DLH15	308	155	41
72DLH15	326	174	41
68DLH16	365	182	49
72DLH16	378	205	49
72DLH17	426	233	53
68DLH18	479	234	60
72DLH18	497	265	59
68DLH19	548	266	67
72DLH19	582	300	70
135' LENGTH			
68DLH13	237	127	35
68DLH14	273	135	38
72DLH14	281	152	38
68DLH15	303	152	42
72DLH15	322	171	42
68DLH16	360	178	49
72DLH16	373	200	49
68DLH17	408	203	53
72DLH17	420	228	53
68DLH18	472	230	60
72DLH18	490	258	59
68DLH19	540	260	67
72DLH19	573	293	70
136' LENGTH			
68DLH13	234	124	35
68DLH14	269	133	38
72DLH14	277	149	38
68DLH15	299	148	41
72DLH15	317	167	42
68DLH16	354	174	49
72DLH16	368	196	49
68DLH17	403	198	53
72DLH17	414	224	56
68DLH18	465	225	60
136' LENGTH (Cont.)			
72DLH18	483	252	59
68DLH19	532	254	67
72DLH19	565	286	70
137' LENGTH			
72DLH14	274	146	38
72DLH15	312	163	41
72DLH16	363	191	49
72DLH17	408	218	53
72DLH18	479	247	59
72DLH19	557	280	70
138' LENGTH			
72DLH14	270	143	38
72DLH15	308	160	42
72DLH16	358	188	49
72DLH17	402	213	53
72DLH18	470	242	59
72DLH19	549	274	70
139' LENGTH			
72DLH14	266	139	38
72DLH15	303	156	41
72DLH16	353	183	49
72DLH17	397	209	53
72DLH18	463	236	59
72DLH19	541	541	70
140' LENGTH			
72DLH14	262	136	38
72DLH15	299	152	41
72DLH16	348	179	49
72DLH17	391	205	53
72DLH18	457	231	59
72DLH19	533	263	70
141' LENGTH			
72DLH14	259	133	38
72DLH15	295	150	42
72DLH16	343	175	49
72DLH17	386	200	53
72DLH18	450	227	59
72DLH19	526	257	70
142' LENGTH			
72DLH14	255	131	38
72DLH15	291	147	42
72DLH16	338	171	49
72DLH17	381	196	53
72DLH18	444	222	59
72DLH19	518	251	70
143' LENGTH			
72DLH14	252	128	38
72DLH15	286	143	41
72DLH16	334	169	49
72DLH17	376	191	53
72DLH18	438	217	59
72DLH19	511	247	70
144' LENGTH			
72DLH14	248	125	38
72DLH15	282	140	41
72DLH16	329	165	49
72DLH17	371	188	53
144' LENGTH (Cont.)			
72DLH18	432	212	59
72DLH19	504	241	70

CODE OF STANDARD PRACTICE

FOR STEEL JOISTS AND JOIST GIRDERS

Adopted by the Steel Joist Institute April 7, 1931
Revised to May 18, 2010 - Effective December 31, 2010

SECTION 1
GENERAL

1.1 SCOPE

The practices and customs set forth herein are in accordance with good engineering practice, tend to ensure safety in steel joist and Joist Girder construction, and are standard within the industry. There shall be no conflict between this code and any legal building regulation. This code shall only supplement and amplify such laws. Unless specific provisions to the contrary are made in a contract for the purchase of steel joists or Joist Girders, this code is understood to govern the interpretation of such a contract.

1.2 APPLICATION

This Code of Standard Practice is to govern as a standard unless otherwise covered in the architects' and engineers' plans and specifications.

1.3 DEFINITIONS

Add-Load. A single vertical concentrated load which occurs at any one panel point along the joist chord. This load is in addition to any other gravity loads specified.

Bend-Check Load. A vertical concentrated load used to design the joist chord for the additional bending stresses resulting from this load being applied at any location between the joist panel points. This load shall already be accounted for in the specified joist designation load, uniform load, or Add-load and is used only for the additional bending check in the chord and does not contribute to the overall axial forces within the joist. An ideal use of this is for incidental loads which have already been accounted for in the design loading but may induce additional bending stress due to this load occurring at any location along the chord.

Buyer. The entity that has agreed to purchase material from the manufacturer and has also agreed to the terms of sale.

Erector. The entity that is responsible for the safe and proper erection of the materials in accordance with all applicable codes and regulations.

Material. Steel joists, Joist Girders and accessories as provided by the seller.

Owner. The entity that is identified as such in the contract documents.

Placement Plans. Drawings that are prepared depicting the interpretation of the contract documents requirements for the material to be supplied by the seller. These floor or roof plans are approved by the specifying professional, buyer, or owner for conformance with the design requirements. The seller uses the information contained on these drawings for final material design. A unique piece mark number is typically shown for the individual placement of the steel joists, Joist Girders and accessories along with sections that describe the end bearing conditions and minimum attachment required so that material is placed in the proper location in the field.

Seller. A company certified by the Steel Joist Institute engaged in the manufacture and distribution of steel joists, Joist Girders and accessories.

Specifying Professional. The licensed professional who is responsible for sealing the building contract documents, which indicates that he or she has performed or supervised the analysis, design and document preparation for the structure and has knowledge of the load-carrying structural system.

Structural Drawings. The graphic or pictorial portions of the contract documents showing the design, location and dimensions of the work. These documents generally include plans, elevations, sections, details, connections, all loads, schedules, diagrams and notes.

1.4 DESIGN

In the absence of ordinances or specifications to the contrary, all designs prepared by the **specifying professional** shall be in accordance with the Steel Joist Institute Standard Specifications Load Tables & Weight Tables of latest adoption.

1.5 RESPONSIBILITY FOR DESIGN AND ERECTION

When material requirements are specified, the seller shall assume no responsibility other than to furnish the items listed in Section 5.2(a). When material requirements are not specified, the seller shall furnish the items listed in Section 5.2(a) in accordance with Steel Joist Institute Standard Specifications Load Tables & Weight Tables of latest adoption, and this code. Pertinent design information shall be provided to the seller as stipulated in Section 6.1. The seller shall identify material by showing size and type. In no case shall the seller assume any responsibility for the erection of the item furnished.

1.6 PERFORMANCE TESTS FOR K-SERIES STEEL JOIST CONSTRUCTION

When a performance test on a joist is required, the following criteria shall be used:

a) The performance test load shall be the maximum factored uniformly distributed downward design load for the selected joist.

   (1) For a **K**-Series joist, this is the TOTAL safe factored uniformly distributed load-carrying capacity tabulated in the Standard LRFD Load Table for the specific joist size and span.

   (2) For a **K**-Series joist with factored loading conditions other than found in the Standard LRFD Load Table, this is the LRFD Load Combination resulting in the highest uniformly distributed downward factored design load.

   (3) For a **K**-Series joist with loading conditions other than found in the Standard ASD Load Table, this is the ASD Load Combination resulting in the highest uniformly distributed downward design load multiplied times 1.50.

b) Joist self-weight and the weight of all test materials shall be included in the calculation of applied performance test loading as appropriate for the joist during testing.

c) Loading shall be uniformly distributed across the full length of the joist top chord, and the load application shall maintain uniform distribution throughout the test. At any stage during the application of the test loading, the test load shall not be distributed in such a manner as to result in any joist component being subjected to a higher proportion of force than intended by the joist design.

d) If tested as a panel assembly, the joists shall be tested in pairs with deck, deck attachments, and bridging installed per the approved joist and deck placement plans. All bottom chord horizontal bridging rows shall be terminated by bracing back to the top chord of the adjacent joist or by a lateral restraint system which does not inhibit the vertical deflection of the test joist.

e) If tested singly, in a load test machine apparatus, the joist chords shall be braced to prevent lateral movement, without inhibiting vertical displacement. The joist top chord shall have lateral braces located at equal spacing of no more than 36 inches (914 mm) on center. The joist bottom chord shall have lateral braces located, at minimum, per the bottom chord bridging locations shown on the approved joist placement plan.

f) The performance test loading shall be applied at a rate of no greater than 25 plf per minute and shall be sustained for no less than 15 minutes. After the maximum test load has been removed for a minimum of 10 minutes, the remaining vertical displacement at midspan shall not exceed 20% of the vertical midspan deflection sustained under the full performance test load.

g) All costs associated with such testing shall be borne by the purchaser.

h) Joists that have been designed and manufactured and have satisfied the above performance test criteria shall be considered to satisfy the intent of the **K**-Series Standard Specification, and shall be considered safe for use in construction. No further proof of strength of individual joist components or connections is required.

SECTION 2
JOISTS, JOIST GIRDERS, AND ACCESSORIES

2.1 STEEL JOISTS AND JOIST GIRDERS

Steel joists and Joist Girders shall carry the designations and meet the requirements of the Steel Joist Institute Standard Specifications Load Tables & Weight Tables of latest adoption.

K-Series joists are furnished with parallel chords only and with a standard end bearing depth of 2 1/2 inches (64 mm). Joist bearing seat depths greater than 2 1/2 inches (64 mm) are available when requirements warrant deeper bearing seats. Conditions where a bearing seat depth of more than 2-1/2 inches (64 mm) may be required include:

- Sloped joists;
- Mixing **K**-Series and **LH**-Series products at a common interior support;
- Masonry supports with a steel bearing plate more than 1/2 inch (13 mm) from the face of the wall.

LH- and **DLH**-Series joists are furnished either underslung or square ended, with top chords either parallel, pitched one way or pitched two ways.

Underslung types are furnished with minimum end bearing depths as shown in Table 2-1. A standard maximum joist bearing seat width (perpendicular to the joist length) is provided. This width shall be permitted to vary based on the joist design and manufacturer. For sloped joist bearing seats refer to the sloped seat requirements tables in the Accessories and Details section of this catalog.

Because **LH**- and **DLH**-Series joists may have exceptionally large end reactions, it is recommended that the supporting structure be designed to provide a nominal minimum unit bearing pressure of 750 pounds per square inch (5171 kilo Pascals).

It is not recommended that a **DLH**-Series joist that exceeds 72 inches (1829 mm) deep and has a span greater than 80 feet (24384 mm) be used in a bottom bearing configuration.

TABLE 2-1

STANDARD END BEARING SEAT DEPTH AND STANDARD MAXIMUM SEAT WIDTH			
JOIST SERIES	**SECTION NUMBER***	**MINIMUM BEARING DEPTH**	**MAXIMUM SEAT WIDTH****
K	ALL	2 ½" (64 mm)	6" (152 mm)
LH/DLH	2 to 17, incl.	5" (127 mm)	8" (229 mm)
DLH	18 to 20, incl.	7 ½" (191 mm)	12" (305 mm)
DLH	21 to 25, incl.	7 ½" (191 mm)	13" (330 mm)
***REFER TO LAST DIGIT(S) OF JOIST DESIGNATION **THE SEAT WIDTH MAY VARY BASED ON DESIGN			

Joist Girders are furnished either underslung or square ended with top chords either parallel, pitched one way or pitched two ways. Underslung types are furnished with a standard end bearing depth of 7 1/2 inches (191 mm). Joist Girders shall be permitted to have either parallel chords or a top chord pitch of up to 1/2 inch per foot (1:24). The nominal depth of a pitched Joist Girder is taken at the center of the span.

Joist Girder bearing seat widths vary depending on the Joist Girder size and shall be permitted to be up to 13" (330 mm) wide. The supporting structural member shall be made wide enough to accommodate the seat widths.

2.2 JOIST LOCATION AND SPACING

The maximum joist spacing shall be in accordance with the requirements of the Standard Specifications Load Tables & Weight Tables of latest adoption.

Where sidewalls, wall beams or tie beams are capable of supporting the floor slab or roof deck, the first adjacent joists may be placed one full space from these members. Joists are provided with camber and may have a significant difference in elevation with respect to the adjacent structure because of this camber. This difference in elevation should be given consideration when locating the first joist adjacent to a side wall, wall beam or tie beam.

Open Web Steel Joists, **K**-Series, should be placed no closer than 6 inches (152 mm) to supporting walls or members. Where partitions occur parallel to joists, there shall be at least one joist provided under each such partition, and more than one such joist shall be provided if necessary to safely support the weight of such partition and the adjacent floor, less the live load, on a strip of floor one foot (305 mm) in width. When partitions occur perpendicular to the joists, they shall be treated as concentrated loads, and joists shall be investigated as indicated in Section 6.1.

2.3 SPECIFYING DESIGN LOADS

Neither the Steel Joist Institute nor the joist manufacturer establishes the loading requirements for which structures are designed.

The specifying professional shall provide the nominal loads and load combinations as stipulated by the applicable code under which the structure is designed and shall provide the design basis (ASD or LRFD).

The specifying professional shall calculate and provide the magnitude and location of ALL JOIST and JOIST GIRDER LOADS. This includes all special loads (drift loads, mechanical units, net uplift, axial loads, moments, structural bracing loads, or other applied loads) which are to be incorporated into the joist or Joist Girder design. For Joist Girders, reactions from supported members shall be clearly denoted as point loads on the Joist Girder. When necessary to clearly convey the information, a Load Diagram or Load Schedule shall be provided.

The specifying professional shall give due consideration to the following loads and load effects:

1. Ponded rain water.
2. Accumulation of snow in the vicinity of obstructions such as penthouses, signs, parapets, adjacent buildings, etc.
3. Wind.
4. Type and magnitude of end moments and/or axial forces at the joist and Joist Girder end supports shall be shown on the structural drawings. For moment resisting joists or Joist Girders framing at or near the top of a column, due consideration shall be given to extend the column length to allow a plate type connection between the top of the joist or Joist Girder top chord and the column.

   Avoid transferring joist or Joist Girder end moments and axial forces through the bearing seat connection.

   A note shall be provided on the structural drawings stating that all moment resisting joists shall have all dead loads applied to the joist before the bottom chord struts are welded to the supporting connection whenever the moments provided do not include dead load.

   The top and bottom chord moment connection details shall be designed by the specifying professional. The joist designer shall furnish the specifying professional with the joist detail information if requested.

The nominal loads, as determined by the specifying professional, shall not be less than that specified in the applicable building codes.

Where concentrated loads occur, the magnitude and location of these concentrated loads shall be shown on the structural drawings when, in the opinion of the specifying professional**,** they shall require consideration by the joist manufacturer. For nominal concentrated loads, which have been accounted for in the specified uniform design loads, a “strut” to transfer the load to a panel point on the opposite chord shall not be required provided that the sum of the concentrated loads within a chord panel does not exceed 100 pounds and the attachments are concentric to the chord.

(a) Specifying Joist Design Loads

The Steel Joist Institute Load Tables are based on uniform loading conditions and are valid for use in selecting joist sizes for gravity loads that can be expressed in terms of "pounds per linear foot" (kiloNewtons per meter) of joist.

The specifying professional shall use one of the five options described below that allows:

- The estimator to price the joists.
- The joist manufacturer to design the joists properly.
- The owner to obtain the most economical joists.

Option 1: Select a joist designation from the Standard Load Table (or specify a joist type using a uniform load in the designation) which has been determined to be adequate for all design loads. The shear and moment envelope resulting from the selected uniform load shall meet the actual shear and moment requirements. Thus, this option alone may not be adequate if large concentrated loads need to be designed for.

Option 2: Select a joist designation from the Standard Load Table (or specify a joist type using a uniform load in the designation) and also provide the load and location of any additional loads on the structural plan with a note “Joist manufacturer shall design joists for additional loads at locations shown.” This option works well for a few added loads per joist with known magnitude and locations.

Option 3: For additional point loads with exact locations not known along the joist or for incidental loads, any one, or both, of the following can be specified on the structural plan in addition to option 1 or 2 above:

a) "**Design for a (__) lb. concentrated load located at any one panel point along the joist**". This is referred to as an "Add-Load".

b) "**Design for additional bending stresses resulting from a (__) lb. concentrated load located at any location along (____) chord**". This is referred to as a "Bend-Check" and can be specified on **top** chord, **bottom** chord, or **both top and bottom** chords. This can be used when the concentrated load is already accounted for in the joist designation, uniform load, or specified Add-Load yet this specified amount of load shall be permitted to also be located at any location between panel points. The additional bending stresses as a result of this load are then designed for. A Bend-Check load shall not exceed (Add-Load + 400 lbs.) A Bend-Check load can be specified by itself without an Add-Load.

c) Both (a) and (b) above can be specified with equal concentrated loads for each; or simply denote **"Design joist for a (__) lb. concentrated load at any location along the (___) chord."**

Example uses:

- Specifying professional selects a standard joist capable of carrying a 500 lb. RTU. However, the location and exact frame size is not yet known but the frame load shall result in two- 250 lbs. point loads at least 5'-0" apart. **Specify a 250 lb. Bend-Check**
- Standard joist specified but not selected for 500 lb. RTU load, location not known. **Specify a 500 lb. Add-Load and 250 lb. Bend-check.**
- Standard SJI joist selected to carry collateral load of 3 psf. Specifying professional wants bending from 150 lb. incidental loads to also be designed for**. Specify a 150 lb. Bend-Check.**

Option 4: Select a KCS joist using moment and end reaction without specifying added loads or diagrams. This option works well for concentrated loads for which exact locations are not known or for multiple loading.

a) Determine the maximum moment.

b) Determine the maximum end reaction (shear).

c) Select the required KCS joist that provides the required moment and end reaction (shear). Note that the top chord end panel is designed for axial load based on the force in the first tension web, which is based on the specified end reaction. A uniform load of 825 plf (12030 N/m) LRFD or 550 plf (8020 N/m) ASD is used to check end panel bending. If the end panel loading exceeds this, reduce the joist spacing or go to Option 5.

d) Specify on the structural drawings that an extra web shall be field applied at all concentrated loads not occurring at panel points.

OPTION 4 - ASD EXAMPLE 1:	**OPTION 4 - LRFD EXAMPLE 1:**
U.S. CUSTOMARY UNITS AND (METRIC UNITS)	**U.S. CUSTOMARY UNITS AND (METRIC UNITS)**
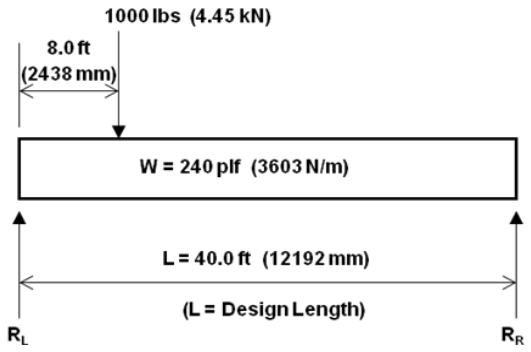	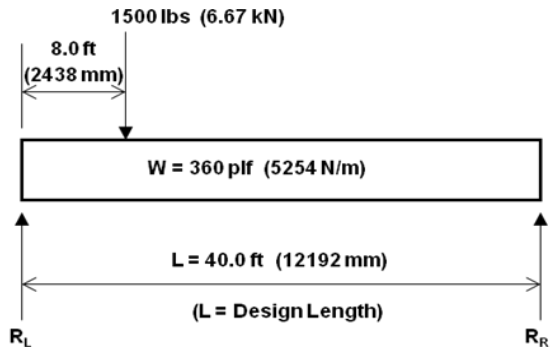
M = 625 k-in. (70.6 kN-m) R_L = 5600 lbs (24.9 kN), R_R = 5000 lbs (22.2 kN) Select a 22KCS3, M = 658 k-in. (74.3 kN-m) R = 6600 lbs (29.3 kN) Bridging section no. 9 for L = 40 ft. (12192 mm) Use 22K9 to determine bridging and stability requirements. Since a standard KCS Joist can be selected from the load table a load diagram is not required.	M = 938 k-in. (105.9 kN-m) R_L = 8400 lbs (37.37 kN), R_R = 7500 lbs (33.36 kN) Select a 22KCS3, M = 987 k-in. (111.5 kN-m) R = 9900 lbs (44.0 kN) Bridging section no. 9 for L = 40 ft. (12192 mm) Use 22K9 to determine bridging and stability requirements. Since a standard KCS Joist can be selected from the load table a load diagram is not required.

OPTION 4 - ASD EXAMPLE 2:	**OPTION 4 - LRFD EXAMPLE 2:**
U.S. CUSTOMARY UNITS AND (METRIC UNITS)	**U.S. CUSTOMARY UNITS AND (METRIC UNITS)**
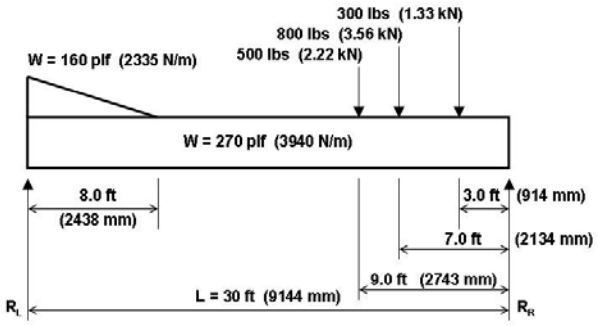	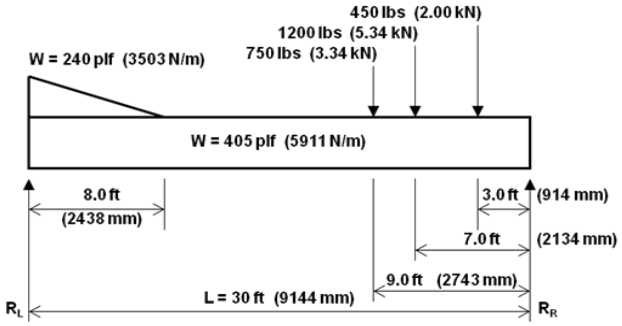
M = 443 k-in. (50.1 kN-m) R_L = 5000 lbs (22.24 kN), R_R = 5340 lbs (23.75 kN) Select a 22KCS2, M = 488 k-in. (55.1 kN-m) R = 5900 lbs (26.2 kN) Bridging section no. 6 for L = 30 ft. (9144 mm) Use 22K6 to determine bridging and stability requirements. Since the maximum uniform load of 430 plf [6275 N/m) (270 plf (3940 N/m) + 160 plf (2335 N/m)] does not exceed the maximum KCS Joist uniform load of 550 plf (8020 N/m) and a standard KCS Joist can be selected from the load table, a load diagram is not required.	M = 664 k-in. (75.03 kN-m) R_L = 7500 lbs (33.36 kN), R_R = 8010 lbs (35.63 kN) Select a 22KCS2, M = 732 k-in. (82.64 kN-m) R = 8850 lbs (39.3 kN) Bridging section no. 6 for L = 30 ft. (9144mm) Use 22K6 to determine bridging and stability requirements. Since the maximum ***factored*** uniform load of 645 plf (9413 N/m) (405 plf (5911 N/m) + 240 plf (3503 N/m)) does not exceed the maximum KCS Joist uniform load of 825 plf (12030 N/m) and a standard KCS Joist can be selected from the load table, a load diagram is not required.

OPTION 4 - ASD EXAMPLE 3:	**OPTION 4 - LRFD EXAMPLE 3:**
U.S. CUSTOMARY UNITS AND (METRIC UNITS)	**U.S. CUSTOMARY UNITS AND (METRIC UNITS)**
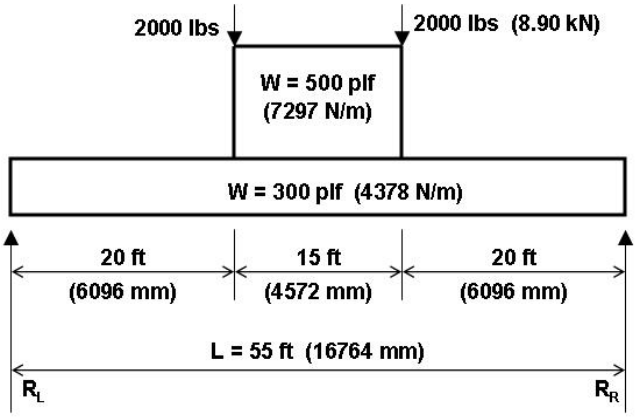	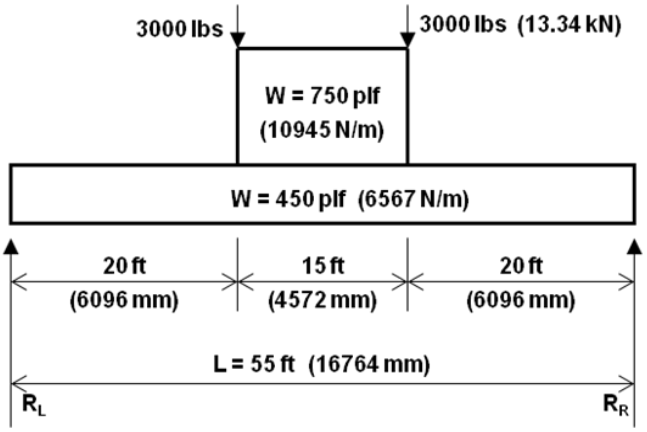
M = 2910 k-in. (328.8 kN-m) $R_L = R_R$ = 14000 lbs (62.28 kN) EXCEEDS CAPACITY OF 30KCS5 (MAXIMUM KCS JOIST) AND EXCEEDS MAXIMUM UNIFORM LOAD OF 550 plf (8027 N/m). **OPTION A:** Use double joists each having a minimum moment capacity, M = 1455 k-in. (164.4 kN-m) and shear capacity, R = 7000 lbs (31.14 kN) and a uniform load of 400 plf (5838 N/m). Select two 28KCS5, M = 1704 k-in. (192.5 kN-m), R = 9200 lbs (40.9 kN). Bridging section no. 12 for L = 55 ft. (16764 mm). Use 28K12 to determine bridging and stability requirements. **OPTION B:** Select a **LH**-Series Joist. See OPTION 5.	M = 4365 k-in. (493.2 kN-m) $R_L = R_R$ = 21000 lbs (93.41 kN) EXCEEDS CAPACITY OF 30KCS5 (MAXIMUM KCS JOIST AND EXCEEDS MAXIMUM ***FACTORED*** UNIFORM LOAD OF 825 plf (12040 N/m). **OPTION A:** Use double joists each having a minimum moment capacity, M = 2183 k-in. (246.65 kN-m) and shear capacity, R = 10500 lbs (46.71 kN) and a uniform load of 600 plf (8756 N/m). Select two 28KCS5, M = 2556 k-in. (288.7 kN-m), R = 13800 lbs (61.3 kN). Bridging section no. 12 for L = 55 ft. (16764 mm) Use 28K12 to determine bridging and stability requirements. **OPTION B:** Select a LH-Series Joist. See OPTION 5.

Option 5: Specify a SPECIAL joist designation when the joist includes more complex loading or for conditions which need consideration of multiple potentially controlling load combinations.

a) Provide a load diagram and/or enough information on the drawings to clearly define ALL loads.

b) If the loading criteria are too complex to adequately communicate on the drawings or with a simple load diagram, then the specifying professional shall provide a load schedule along with the appropriate load combinations. Regardless of where the loads are shown, unfactored design loads broken down by load categories shall be provided in order to design the joists correctly with applicable load combinations.

   Place the designation (e.g. 28K SP or 28LH SP) with the following note: "Joist manufacturer to design joist to support loads as shown."

OPTION 5 - ASD EXAMPLE:	**OPTION 5 - LRFD EXAMPLE:**
U.S. CUSTOMARY UNITS AND (METRIC UNITS)	**U.S. CUSTOMARY UNITS AND (METRIC UNITS)**
Load diagram per ASCE 7 2.4.1(3), D + S	**Unfactored Load diagram per ASCE 7 2.3.2(3), 1.2D+1.6S**
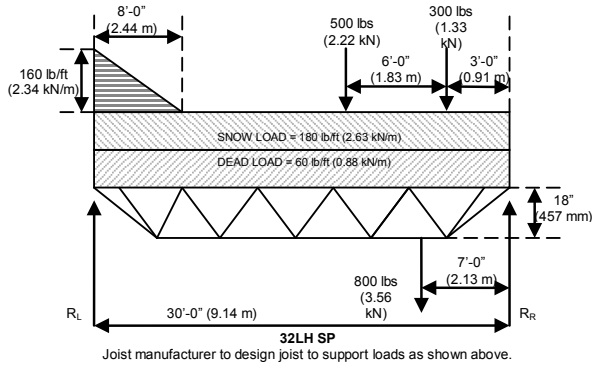	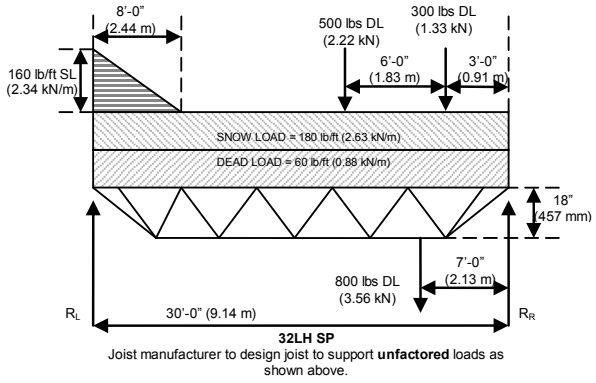
PLEASE NOTE THE LOAD COMBINATIONS SHOWN ARE FOR REFERENCE EXAMPLES ONLY.	

CAUTION FOR OPTIONS 1 thru 5 ABOVE:

1. If a K-Series joist is being specified, the specifying professional shall compare the equivalent uniform loads derived from the maximum moment and shear to the uniform loads tabulated in the **K**-Series Load Table. An equivalent unfactored uniform load in excess of 550 plf (8020 N/m) or a maximum unfactored end reaction exceeding 9200 lbs. (40.9 kN) indicates that the specifying professional shall use additional joists to reduce the loading or use an **LH**-Series joist and make provisions for 5 inch (127 mm) deep bearing seats.

2. If the joist has not been designed for localized accumulation of loads which results in a point or concentrated load, this load attachment shall be made at top or bottom chord panel points. Therefore, specify on the structural drawings, "Where concentrated loads do not occur at panel points, an extra web shall be field applied from the point of attachment to a panel point on the opposite chord".

(b) Specifying Joist Girder Design Loads

The Steel Joist Institute's Design Guide ASD or LRFD Weight Tables for Joist Girders are based on uniformly spaced panel point loading conditions and are valid for use in selecting Joist Girder sizes for gravity conditions that can be expressed in kips (kiloNewtons) per panel point on the Joist Girder. Note that anything other than point loads shall be shown unfactored or in a schedule. For a given Joist Girder span, the specifying professional first determines the number of joist spaces. Then the panel point loads are calculated and a depth is selected. The information provided in the tables gives the Joist Girder weight in pounds per linear foot (kiloNewtons per meter) for various depths and loads.

1. The purpose of the Joist Girder Design Guide Weight Table is to assist the specifying professional in the selection of a roof or floor support system.
2. It is not necessary to use only the depths, spans, or loads shown in the tables.
3. Holes in chord elements present special problems which shall be considered by both the specifying professional and the Joist Girder Manufacturer. The sizes and locations of such holes shall be clearly indicated on the structural drawings.
4. Live load deflection rarely governs because of the relatively small span to depth ratios of Joist Girders. However, it is recommended that a breakdown of the point loads, by load category (i.e. TL/LL), be provided so specified deflection requirements and load combinations can be properly accounted for in design.

Example using *Allowable Strength Design (ASD)* and U. S. Customary units:	**Example using *Load and Resistance Factor Design (LRFD)* and U. S. Customary units:**
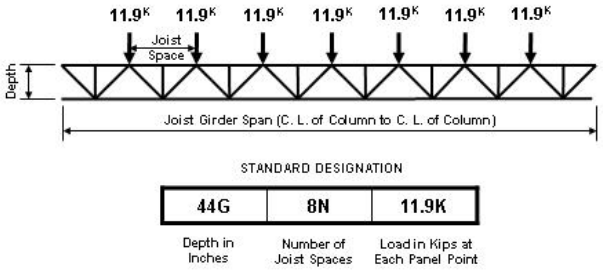	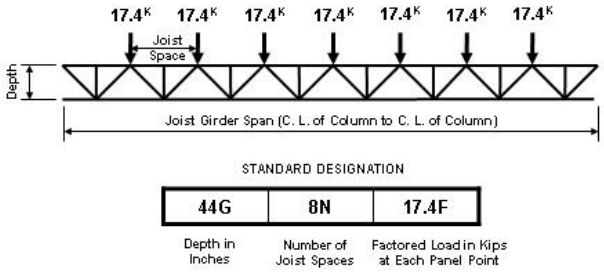
Given 42'-0" x 50'-0" bay. Joists spaced on 5'-3" centers Live Load = 30 psf Dead Load = 15 psf (includes the approximate Joist Girder weight) Total Load = 45 psf Note: Web configuration may vary from that shown. Contact joist manufacturer if exact layout must be known.	Given 42'-0" x 50'-0" bay. Joists spaced on 5'-3" centers Live Load = 30 psf x 1.6 Dead Load = 15 psf x 1.2 (includes the approximate Joist Girder weight) Total Load = 66 psf (factored) Note: Web configuration may vary from that shown. Contact joist manufacturer if exact layout must be known.
1. Determine number of actual joist spaces (N). In this example, N = 8.	1. Determine number of actual joist spaces (N). In this example, N = 8.
2. Compute total load: Total load = 5.25 x 45 psf = 236.25 plf	2. Compute total factored load: Total load = 5.25 x 66 psf = 346.50 plf
3. Joist Girder Section: (Interior)	3. Joist Girder Section: (Interior)
a) Compute the factored concentrated load at top chord panel points P = 236.25 x 50 = 11,813 lbs = 11.9 kips (use 12K for depth selection).	a) Compute the factored concentrated load at top chord panel points P = 346.5 x 50 = 17,325 lbs = 17.4 kips (use 18K for depth selection).
b) Select Joist Girder depth: Refer to the ASD Joist Girder Design Guide Weight Table for the 42'-0" span, 8 panel, 12.0K Joist Girder. The rule of about one inch of depth for each foot of span is a good compromise of limited depth and economy. Therefore, select a depth of 44 inches.	b) Select Joist Girder depth: Refer to the LRFD Joist Girder Design Guide Weight Table for the 42'-0" span, 8 panel, 18.0K Joist Girder. The rule of about one inch of depth for each foot of span is a good compromise of limited depth and economy. Therefore, select a depth of 44 inches.
c) The Joist Girder shall then be designated 44G8N11.9K.	c) The Joist Girder shall then be designated 44G8N17.4F. Note that the letter “F” is included at the end of the designation to clearly indicate that this is a factored load.
d) The ASD Joist Girder Design Guide Weight Table shows the weight for a 44G8N12K as 49 pounds per linear foot. The designer should verify that the weight is not greater than the weight assumed in the Dead Load above.	d) The LRFD Joist Girder Design Guide Weight Table shows the weight for a 44G8N18.0F as 49 pounds per linear foot. The designer should verify that the weight is not greater than the weight assumed in the Dead Load above.

e) Check live load deflection:

Live load = 30 psf x 50 ft. = 1500 plf

Approximate Joist Girder moment of inertia

= 0.027 NPLd

= 0.027 x 8 x 11.9 x 42 x 44 = 4750 in.^{4}

Allowable deflection for plastered ceilings

= L/360 = $\frac{42(12)}{360} = 1.40$ in.

$$\Delta = 1.15\left[\frac{5wL^4}{384EI}\right] = \frac{1.15(5)(1.500/12)[(42)(12)]^4}{384(29000)(4750)}$$

= 0.88 in. <1.40 in., Okay

e) Check live load deflection:

Live load = 30 psf x 50 ft. = 1500 plf

Approximate Joist Girder moment of inertia

= 0.018 NPLd

= 0.018 x 8 x 17.4 x 42 x 44 = 4630 in.^{4}

Allowable deflection for plastered ceilings

= L/360 = $\frac{42(12)}{360} = 1.40$ in.

$$\Delta = 1.15\left[\frac{5wL^4}{384EI}\right] = \frac{1.15(5)(1.500/12)[(42)(12)]^4}{384(29000)(4630)}$$

= 0.90 in. <1.40 in., Okay

(c) **Load Schedule Example**

LOAD SCHEDULE (All Loads are to be shown as unfactored)

MARK	DESIGNATION (1) (TL/LL) Joists: (plf) Girders: (kips)	LOADING (2) DL (3) (plf)	LOADING (2) LL (4) or L_r/S/R (plf)	W WIND DOWN WARD (plf)	W WIND NET (5) UPLIFT (plf)	ADD-LOAD (6) TL/LL (kips)	BEND-CHECK (7) D TC (kips)	BEND-CHECK (7) D BC (kips)	REMARKS
J1	18KSP	120	185		180	1.0/0.6		0.3	Axial Loads
J2	24K7SP	85	155						Wind Moments
J3	28LHSP	110	355	95	175	0.5			Drift Loads, see diagram
G1	36G5N6.5K/3.5K				360				End Moments

(1) Joist designation loads include all uniform gravity loads. **Provide both Total and Live loads.**

(2) Loading values are not required if designation loading values are correct for deflection and load combinations.

(3) When standard SJI designations are used, the design Dead Load is required for load combinations with Wind or Seismic.

(4) The Floor or Roof Live load, Snow, or Rain load.

(5) When Net Uplift is specified for simple loading, it shall already take into account possible reduced Dead Loading present in order to create the largest Net uplift load combination. For more complex loading or when the Dead Load varies greatly for use in load combinations below, ***Gross*** uplift should be specified with the minimum and maximum Dead Loading values clearly defined. If the uplift cannot be assigned in pounds per lineal foot, a diagram can be shown for joist loading using pounds per square foot.

(6) A concentrated load applied at any panel point on both the top chord and bottom chord.

(7) Chord members shall be designed for additional bending stresses created by this concentrated Total load.

MARK	DESIGNATION [1] (TL/LL) Joists: (plf) Girders: (kips)	MIN. I (in.*4)	AXIAL			END MOMENTS								TRANSFER DETAILS @ GRIDS
			W WIND (kips)	E SEISMIC (kips)	E_m (kips)	LIVE LOAD CONTINUITY MOMENTS (k-ft.)		LATERAL MOMENTS (k-ft.)						
								W WIND		E		E_m		
						LEFT	RIGHT	LEFT	RIGHT	LEFT	RIGHT	LEFT	RIGHT	
J1	18KSP		W=18.0	E=21.8										9/S8 @ 4
J2	24K7SP					40	40	35	35					
G1	36G5N6.5K/3.5K	985				75	95	55	60					11/S8 @ B,C

When lateral moments are specified, continuity moments **shall** also be specified. A Load Schedule which shows a complete breakdown of all loads by Load Category may be required.

When special loads as shown in the tables above are specified, the load combinations to be used for joist and Joist Girder design **shall** be provided. Two examples showing how to list load combinations are shown below:

ASD example- Basic Load Combinations	**LRFD example** - Basic Load Combinations
1. D	1. 1.4D
2. D + L	2. 1.2D + 1.6L + 0.5(L_r or S or R)
3. D + (L_r or S or R)	3. 1.2D + 1.6(L_r or S or R) + (1.0L or 0.8W)
4. D + 0.75L + 0.75(L_r or S or R)	4. 1.2D + 1.6W + 1.0L + 0.5(L_r or S or R)
5. D + (W or 0.7E)	5. 1.2D + 1.0E + 1.0L + 0.2S
6. D + 0.75(W or 0.7E) + 0.75L + 0.75(L_r or S or R)	6. 0.9D + 1.6W
7. 0.6D + W	7. 0.9D + 1.0E
8. 0.6D + 0.7E	
Special Seismic Load Combinations	Special Seismic Load Combinations
9. D + 0.7E_m	8. 1.2D + 1.0L + E_m
10. D + 0.525E_m + 0.75L + 0.75(L_r or S or R)	9. 0.9D + E_m
11. 0.6D + 0.7E_m	

2.4 SLOPED END BEARINGS

Where steel joists or Joist Girders are sloped, beveled ends or sloped end bearings may be provided where the slope exceeds 1/4 inch in 12 inches (1:48). When sloped end bearings are required, the seat depths shall be adjusted to maintain the standard height at the shallow end of the sloped bearing. For Open Web Steel Joists, **K**-Series, bearing ends shall be permitted to not be beveled for slopes of 1/4 inch or less in 12 inches (1:48).

2.5 JOIST AND JOIST GIRDER EXTENSIONS

Steel joist and Joist Girder extensions shall be in accordance with the requirements of the Steel Joist Institute Standard Specifications Load Tables & Weight Tables of latest adoption.

The magnitude and location of the loads to be supported, deflection requirements, and proper bracing of joist or Joist Girder Top Chord Extensions (S Type), Extended Ends (R Type) or full depth cantilever ends shall be clearly indicated on the structural drawings.

2.6 CEILING EXTENSIONS

Ceiling extensions shall be furnished to support ceilings which are to be attached to the bottom of the joists. They are not furnished for the support of suspended ceilings. The ceiling extension shall be either an extended bottom chord element or a loose unit, whichever is standard with the manufacturer, and shall be of sufficient strength to properly support the ceiling.

2.7 BRIDGING AND BRIDGING ANCHORS

(a) Bridging standard with the manufacturer and complying with the Steel Joist Institute Standard Specifications Load Tables & Weight Tables of latest adoption shall be used for bridging all joists furnished by the manufacturer. Positive anchorage shall be provided at the ends of each bridging row at both top and bottom chords.

(b) For **K-** and **LH-**Series joists horizontal bridging is recommended for spans up to and including 60 feet (18288 mm) except where the Steel Joist Institute Standard Specifications Load Tables & Weight Tables require bolted diagonal bridging for erection stability.

LH- and **DLH**-Series joists exceeding 60 feet (18288 mm) in length shall have bolted diagonal bridging for all rows.

Refer to Section 6 in the **K-**Series Standard Specification and Section 105 in the **LH/DLH**-Series Standard Specification for erection stability requirements.

Refer to Appendix B for OSHA steel joist erection stability requirements.

Horizontal bridging shall consist of continuous horizontal steel members designed per the applicable **K**-Series Standard Specification Section 5 or Section 104 in the **LH/DLH**-Series Standard Specification. The material sizes shown in Tables 2.7-1a and 2.7-1b meet the criteria. Alternately, or for "load/load" designation joists, Table 2.7-1c provides the maximum horizontal bridging force, P_{br}, for various combinations of joist spacing and bridging angle size.

(c) Diagonal cross bridging consisting of angles or other shapes connected to the top and bottom chords of **K-, LH-,** and **DLH-**Series joists shall be used when required by the Steel Joist Institute Standard Specifications Load Tables & Weight Tables of latest adoption.

Diagonal bridging, when used, shall be designed per the applicable **K**-Series Standard Specification Section 5 or Section 104 in the **LH/DLH**-Series Standard Specification.

When the bridging members are connected at their point of intersection, the material sizes listed in Table 2.7-2 and Table 2.7-3 shall meet the above specifications.

For **LH/DLH**-Series joists, where the joist spacing is less than 70 percent of the joist depth, bolted horizontal bridging shall be provided in addition to the diagonal bridging, as shown in Table 2.7-3.

(d) When bolted diagonal erection bridging is required, the following shall apply:

1. The bridging shall be indicated on the joist placement plan.
2. The joist placement plan shall be the exclusive indicator for the proper placement of this bridging.
3. Shop installed bridging clips, or functional equivalents, shall be provided where the bridging bolts to the steel joist.
4. When two pieces of bridging are attached to the steel joist by a common bolt, the nut that secures the first piece of bridging shall not be removed from the bolt for the attachment of the second piece.
5. Bridging attachments shall not protrude above the top chord of the steel joists.
6. See Table 2.7-4 for bolt sizes that meet the connection requirements of the **K**-Series Standard Specification Section 5 and the **LH/DLH**-Series Standard Specification Section 104.

TABLE 2.7-1a

K-SERIES JOISTS MAXIMUM JOIST SPACING FOR HORIZONTAL BRIDGING							
JOIST SECTION NUMBER*	**Bridging Force P_{br}**	BRIDGING MATERIAL SIZE**					
		Equal Leg Angles					
		1 x 7/64 (25 x 3 mm) r = 0.20" (5.08 mm)	**1-1/4 x 7/64 (32 x 3 mm) r = 0.25" (6.35 mm)**	**1-1/2 x 7/64 (38 x 3 mm) r = 0.30" (7.62 mm)**	**1-3/4 x 7/64 (45 x 3 mm) r = 0.35" (8.89 mm)**	**2 x 1/8 (52 x 3 mm) r = 0.40" (10.16 mm)**	**2-1/2 x 5/32 (64 x 4 mm) r = 0.50" (12.70 mm)**
	lbs (N)	ft.-in. (mm)	ft.-in. (mm)	ft.-in. (mm)	ft.-in. (mm)	ft.-in. (mm)	ft.-in. (mm)
1 to 8, incl.	340 (1512)	5'- 0" (1524)	6'- 3" (1905)	7'- 6" (2286)	8'- 7" (2616)	10'- 0" (3048)	12'- 6" (3810)
9 to 10, incl.	450 (2002)	4'- 4" (1321)	6'- 1" (1854)	7'- 6" (2286)	8'- 7" (2616)	10'- 0" (3048)	12'- 6" (3810)
11 to 12, incl	560 (2491)	3'- 11" (1194)	5'- 6" (1676)	7'- 3" (2210)	8'- 7" (2616)	10'- 0" (3048)	12'- 6" (3810)

*Refer to last digit(s) of Joist Designation

**Connection to joist shall resist a nominal unfactored 700 pound force (3114 N)

TABLE 2.7-1b

LH-SERIES JOISTS
MAXIMUM JOIST SPACING FOR HORIZONTAL BRIDGING
SPANS OVER 60 ft. (18.3 m) REQUIRE BOLTED DIAGONAL BRIDGING

Joist Section Number*	Force P_{br} lbs (N)	BRIDGING MATERIAL SIZE** Equal Leg Angles					
		1 x 7/64 (25 x 3 mm) r = 0.20" (5.08 mm)	**1-1/4 x 7/64 (32 x 3 mm) r = 0.25" (6.35 mm)**	**1-1/2 x 7/64 (38 x 3 mm) r = 0.30" (7.62 mm)**	**1-3/4 x 7/64 (45 x 3 mm) r = 0.35" (8.89 mm)**	**2 x 1/8 (52 x 3 mm) r = 0.40" (10.16 mm)**	**2-1/2 x 5/32 (64 x 4 mm) r = 0.50" (12.70 mm)**
		ft.-in. (mm)	ft.-in. (mm)	ft.-in. (mm)	ft.-in. (mm)	ft.-in. (mm)	ft.-in. (mm)
02 to 03, incl.	400 (1779)	4'–7" (1397)	6'–3" (1905)	7'–6" (2286)	8'–9" (2667)	10'–0" (3048)	12'–6" (3810)
04 to 05, incl.	550 (2447)	3'–11"(1194)	5'–6" (1676)	7'–4" (2235)	8'–9" (2667)	10'–0" (3048)	12'–6" (3810)
06 to 08, incl.	750 (3336)		4'–9" (1448)	6'–3" (1905)	7'–11" (2413)	10'–0" (3048)	12'–6" (3810)
09	850 (3781)		4'–5" (1346)	5'–10" (1778)	7'–5" (2261)	9'–9" (2972)	12'–6" (3810)
10	900 (4003)		4'–4" (1321)	5'–8" (1727)	7'–3" (2210)	9'–5" (2870)	12'–6" (3810)
11	950 (4226)		4'–2" (1270)	5'–7" (1702)	7'–0" (2134)	9'–2" (2794)	12'–6" (3810)
12	1100 (4893)		3'-11" (1194)	5'–2" (1575)	6'–8" (2032)	8'–6" (2591)	12'-6" (3810)
13	1200 (5338)		3'-9" (1143)	4'–11" (1499)	6'–3" (1905)	8'-2" (2489)	12-6" (3810)
14	1300 (5783)			4'-9" (1448)	6'-0" (1829)	7'-10" (2388)	12'-4" (3759)
15	1450 (6450)			4'-6" (1372)	5'-8" (1727)	7'-5" (2261)	11'-8" (3556)
16 to 17, incl.	1850 (8229)			4'-0" (1219)	5'-0" (1524)	6'-7"(2007)	10'-4" (3150)
18 to 20, incl.	2000 (8896)			3'-10" (1168)	4'-10" (1473)	6'-4" (1930)	9'-11" (3023)
21 to 22, incl.	2500 (11120)				4'-4" (1321)	5'-8" (1727)	8'-10" (2692)
23 to 24, incl.	3100 (13789)				3'-10" (1168)	5'-1" (1549)	7'-11" (2413)
25	3500 (15569)					4'-9"(1448)	7'-6" (2286)

* Refer to last two digit(s) of Joist Designation
** Connection to joist shall resist force listed in Table 104.5-1

TABLE 2.7-1c

MAXIMUM BRIDGING FORCE (P_{br}) FOR HORIZONTAL BRIDGING (lbs)							
JOIST SPACING (ft.-in.)	BRIDGING ANGLE SIZE (EQUAL LEG ANGLE)						
	1 x 7/64 r = 0.20"	1¼ x 7/64 r = 0.25"	1½ x7/64 r = 0.30"	1¾ x 7/64 r = 0.35"	2 x 1/8 r = 0.40"	2½ x 5/32 r = 0.50"	3 x 3/16 r = 0.60"
2'-0"	2150	3960	5600				
2'-6"	1370	2730	4410	5910			
3'-0"	950	1890	3290	4850			
3'-6"	700	1390	2420	3840	6180		
4'-0"	530	1060	1850	2960	5030		
4'-6"	420	840	1460	2340	4000		
5'-0"	340	680	1180	1890	3240		
5'-6"	-	560	980	1560	2670		
6'-0"	-	470	820	1310	2250	5490	
6'-6"	-	-	700	1120	1910	4680	
7'-0"	-	-	600	960	1650	4030	
7'-6"	-	-	520	840	1440	3510	
8'-0"	-	-	-	740	1260	3090	
8'-6"	-	-	-	650	1120	2740	5680
9'-0"	-	-	-	-	1000	2440	5060
9'-6"	-	-	-	-	890	2190	4540
10'-0"	-	-	-	-	810	1970	4100
10'-6"	-	-	-	-	-	1790	3720
11'-0"	-	-	-	-	-	1630	3390
11'-6"	-	-	-	-	-	1490	3100
12'-0"	-	-	-	-	-	1370	2850

TABLE 2.7-2

K, LH, and DLH SERIES JOISTS
MAXIMUM JOIST SPACING FOR DIAGONAL BRIDGING

JOIST DEPTH	BRIDGING ANGLE SIZE – (EQUAL LEG ANGLE)							
	1 x 7/64 (25 x 3 mm) **r = 0.20"** (5.08 mm)	**1-1/4 x 7/64** (32 x 3 mm) **r = 0.25"** (6.35 mm)	**1-1/2 x 7/64** (38 x 3 mm) **r = 0.30"** (7.62 mm)	**1-3/4 x 7/64** (45 x 3 mm) **r = 0.35"** (8.89 mm)	**2 x 1/8** (50 x 3 mm) **r = 0.40"** (10.16 mm)	**2 ½ x 5/32** (64x 4 mm) **r=0.50"** (12.70 mm)	**3 x 3/16** (76 x 5 mm) **r = 0.60"** (15.24 mm)	**3 ½ x 1/4** (89 x 6 mm) **r = 0.70"** (17.78 mm)
in. (mm)	**ft.-in. (mm)**	**ft.-in. (mm)**	**ft.-in. (mm)**	**ft.-in. (mm)**	**ft.-in. (mm)**	**ft.-in. (mm)**	**ft.-in. (mm)**	**ft.-in. (mm)**
12" (305)	6'-7" (2007)	8'-3" (2514)	9'-11"(3022)	11'-7" (3530)	13'-3"(4038)	16'-7"(5055)	19'-11"(6070)	23'-3"(7086)
14" (356)	6'-6" (1981)	8'-3" (2514)	9'-11"(3022)	11'-7" (3530)	13'-3"(4038)	16'-7"(5055)	19'-11"(6070)	23'-3"(7086)
16" (406)	6'-6" (1981)	8'-2" (2489)	9'-10"(2997)	11'-7" (3530)	13'-3"(4038)	16'-7"(5055)	19'-11"(6070)	23'-3"(7086)
18" (457)	6'-6" (1981)	8'-2" (2489)	9'-10"(2997)	11'-6" (3505)	13'-3"(4038)	16'-7"(5055)	19'-11"(6070)	23'-3"(7086)
20" (508)	6'-5" (1955)	8'-2" (2489)	9'-10"(2997)	11'-6" (3505)	13'-2"(4013)	16'-7"(5055)	19'-11"(6070)	23'-3"(7086)
22" (559)	6'-4" (1930)	8'-1" (2463)	9'-10"(2997)	11'-6" (3505)	13'-2"(4013)	16'-6"(5029)	19'-11"(6070)	23'-3"(7086)
24" (610)	6'-4" (1930)	8'-1" (2463)	9'-9" (2971)	11'-5" (3479)	13'-2"(4013)	16'-6"(5029)	19'-10"(6045)	23'-3"(7086)
26" (660)	6'-3" (1905)	8'-0" (2438)	9'-9" (2971)	11'-5" (3479)	13'-1"(3987)	16'-6"(5029)	19'-10"(6045)	23'-2"(7061)
28" (711)	6'-3" (1905)	8'-0" (2438)	9'-8" (2946)	11'-5" (3479)	13'-1"(3987)	16'-6"(5029)	19'-10"(6045)	23'-2"(7061)
30" (762)	6'-2" (1879)	7'-11 (2413)	9'-8" (2946)	11'-4" (3454)	13'-1"(3987)	16'-5"(5004)	19'-10"(6045)	23'-2"(7061)
32" (813)	6'-1" (1854)	7'-10"(2387)	9'-7" (2921)	11'-4" (3454)	13'-0" (3962)	16'-5"(5004)	19'-9"(6020)	23'-2"(7061)
36" (914)	5'-11"(1803)	7'-9" (2362)	9'-6" (2895)	11'-3" (3429)	12'-11"(3973)	16'-4"(4979)	19'-9"(6020)	23'-1"(7035)
40" (1016)	5'-9"(1753)	7'-7" (2311)	9'-5" (2870)	11'-2" (3403)	12'-10"(3911)	16'-4"(4979)	19'-8"(5994)	23'-1"(7035)
44" (1118)	5'-6"(1676)	7'-5" (2260)	9'-3" (2819)	11'-0" (3352)	12'-9" (3886)	16'-3"(4953)	19'-7"(5969)	23'-0"(7010)
48" (1219)	5'-4"(1626)	7'-3" (2209)	9'-2" (2794)	10'-11"(3327)	12'-8" (3860)	16'-2"(4928)	19'-7"(5969)	22'-11"(6985)
52" (1321)	5'-0"(1524)	7'-1"(2159)	9'-0" (2743)	10'-10" (3302)	12'-7" (3835)	16'-1"(4902)	19'-6"(5943)	22'-11"(6985)
56" (1422)	4'-9"(1448)	6'-10"(2083)	8'-10"(2692)	10'-8" (3251)	12'-5" (3784)	16'-0"(4877)	19'-5"(5918)	22'-10"(6960)
60" (1524)	4'-4"(1321)	6'-8"(2032)	8'-7" (2616)	10'-6" (3200)	12'-4" (3759)	15'-10"(4826)	19'-4"(5893)	22'-9"(6935)
64" (1626)	**	6'-4"(1931)	8 -5" (2565)	10'-4" (3149)	12'-2" (3708)	15'-9" (4801)	19'-3"(5867)	22'-8"(6909)
68" (1727)	**	6'-1"(1854)	8'-2" (2489)	10'-2" (3098)	12'-0" (3657)	15'-8" (4775)	19'-2"(5842)	22'-7"(6884)
72" (1829)	**	5'-9"(1753)	8'-0" (2438)	10'-0" (3048)	11'-10"(3606)	15'-6" (4724)	19'-1" (5816)	22'-6" (6858)
80" (2032)	**	5'-0"(1524)	7'-5"(2260)	9'-6" (2895)	11'-6" (3505)	15'-3" (4648)	18'-10"(5740)	22'-4" (6807)
88" (2235)		**	6'-9"(2058)	9'-0" (2743)	11'-1" (3378)	14'-11"(4546)	18'-7" (5664)	22'-1" (6731)
96" (2438)		**	6'-0"(1829)	8'-5" (2565)	10'-8"(3251)	14'-7" (4445)	18'-4" (5588)	21'-11"(6680)
104" (2642)			**	7'-9" (2362)	10'-1"(3073)	14'-2" (4318)	18'-0" (5486)	21'-8" (6604)
112" (2845)			**	7'-0" (2134)	9'-6"(2895)	13'-9" (4191)	17'-8" (5385)	21'-4" (6503)
120" (3048)				**	8'-9"(2667)	13'-4"(4064)	17'-3" (5258)	21'-1" (6426)

****INTERPOLATION BELOW THE MINIMUM VALUES SHOWN IS NOT ALLOWED.**
SEE TABLE 2.7-3 FOR MINIMUM JOIST SPACE FOR DIAGONAL ONLY BRIDGING.

TABLE 2.7-3

LH AND DLH SERIES JOISTS HORIZONTAL PLUS DIAGONAL BRIDGING REQUIREMENTS		
JOIST DEPTH	**MINIMUM JOIST SPACE FOR DIAGONAL ONLY BRIDGING** **(0.70 x DEPTH)***	**HORIZONTAL AND DIAGONAL MINIMUM ANGLE SIZE REQUIRED** FOR JOIST SPACING < (0.70 X DEPTH) ANDJOIST SPANS > 60'-0"
in.	**ft.- in.**	**in.**
52"	3'- 0"	1" x 1" x 7/64"
56"	3'- 3"	1" x 1" x 7/64"
60"	3'- 6"	1" x 1" x 7/64"
64"	3'- 8"	1¼" x 1¼" x 7/64"
68"	3'-11"	1¼" x 1¼" x 7/64"
72"	4'- 2"	1¼" x 1¼" x 7/64"
80"	4'- 8"	1¼" x 1¼" x 7/64"
88"	5'- 1"	1 ½" x 1 ½" x 7/64"
96"	5'- 7"	1 ½" x 1 ½" x 7/64"
104"	6'- 0"	1 ¾" x 1 ¾" x 7/64"
112"	6'- 6"	1 ¾" x 1 ¾" x 7/64"
120"	7'- 0"	2" x 2" x1/8"
*NOTE: WHEN THE JOIST SPACING IS LESS THAN 0.70 x JOIST DEPTH, BOLTED HORIZONTAL BRIDGING SHALL BE USED IN ADDITION TO DIAGONAL BRIDGING.		

TABLE 2.7-4

BOLT SIZES WHICH MEET BOLTED BRIDGING CONNECTION REQUIREMENTS		
JOIST SERIES	**SECTION NUMBER***	**BOLT DIAMETER**
K	ALL	3/8" A307
LH/DLH	2 – 12	3/8" A307
LH/DLH	13 – 17	1/2" A307
DLH	18 – 20	5/8" A307
DLH	21 – 22	5/8" A325
DLH	23 – 25	3/4" A325
*REFER TO LAST DIGIT(S) OF JOIST DESIGNATION NOTE: WASHERS SHALL BE USED WITH SLOTTED OR OVERSIZED HOLES. BOLTS SHALL BE TIGHTENED TO A MINIMUM SNUG TIGHT CONDITION.		

2.8 HEADERS

Headers for Open Web Steel Joists, **K**-Series as outlined and defined in Section 5.2(a) shall be furnished by the seller. Such headers shall be any type standard with the manufacturer. Conditions involving headers shall be investigated and, if necessary, provisions made to provide a safe condition. Headers are not provided for Longspan Steel Joists, **LH**-Series, and Deep Longspan Steel Joists, **DLH**-Series.

2.9 BOTTOM CHORD LATERAL BRACING FOR JOIST GIRDERS

Bottom chord lateral bracing shall be permitted to be furnished to prevent lateral movement of the bottom chord of the Joist Girder and to prevent the ratio of chord length to chord radius of gyration from exceeding that specified in the Steel Joist Institute Standard Specifications Load Tables & Weight Tables of latest adoption. The lateral bracing shall be that which is standard with the manufacturer, and shall be sufficient to properly brace the bottom chord of the Joist Girder.

SECTION 3
MATERIALS

3.1 STEEL

The steel used in the manufacture of joists and Joist Girders shall comply with the Steel Joist Institute Standard Specifications Load Tables & Weight Tables of latest adoption.

3.2 PAINT

(a) Standard Shop Paint - The shop coat of paint, when specified, shall comply with the Steel Joist Institute Standard Specifications Load Tables & Weight Tables of latest adoption.

(b) Disclaimer - The typical shop applied paint that is used to coat steel joists and Joist Girders is a dip applied, air dried paint. The paint is intended to be an impermanent and provisional coating which shall protect the steel for only a short period of exposure in ordinary atmospheric conditions.

Since most steel joists and Joist Girders are painted using a standard dip coating, the coating shall be permitted to not be uniform and shall be permitted to include drips, runs, and sags. Compatibility of any coating including fire protective coatings applied over the standard shop paint shall be the responsibility of the specifier and/or painting contractor.

The shop applied paint may require field touch-up/repair as a result of, but not limited to, the following:

1. Abrasions from: Bundling, banding, loading and unloading, chains, dunnage during shipping, cables and chains during erection, bridging, installation, and other handling at the jobsite.
   NOTE: Rusting should be expected at any abrasion.
2. Dirt.
3. Diesel smoke.
4. Road salt.
5. Weather conditions during storage.

The joist manufacturer shall not be responsible for the condition of the paint if it is not properly protected after delivery.

SECTION 4
INSPECTION

Inspections shall be made in accordance with the Steel Joist Institute Standard Specifications Load Tables & Weight Tables Section 5.12 for **K**-Series, Section 104.13 for **LH-** and **DLH**-Series, and Section 1004.10 for Joist Girders.

SECTION 5
ESTIMATING

5.1 PLANS FOR BIDDING

Plans to serve as the basis for bids shall show the character of the work with sufficient clarity to permit making an accurate estimate and shall show the following:

Designation and location of materials [see Section 5.2(a)], including any special design or configuration requirements.

Locations and elevations of all steel and concrete supporting members and bearing walls.

Location and length of joist extended ends.

Location and size of all openings in floors and roofs.

Location of all partitions.

Loads and their locations as defined in Section 6.1.

Construction and thickness of floor slabs, roof deck, ceilings and partitions.

Joists or Joist Girders requiring extended bottom chords.

Paint, if other than manufacturer's standard.

5.2 SCOPE OF ESTIMATE

(a) Unless otherwise specified, the following items shall be included in the estimate, and requirements shall be determined as outlined in Section 6.1.

Steel Joists.
Joist Girders.
Joist Substitutes.
Joist Extended Ends.
Ceiling Extensions.
Extended bottom chord used as strut.
Bridging and bridging anchors.
Joist Girder bottom chord bracing.
Headers which are defined as members supported by and carrying Open Web Steel Joists, **K**-Series.
One shop coat of paint, when specified, shall be in accordance with Section 3.2.

(b) The following items shall not be included in the estimate but shall be permitted to be quoted and identified by the joist manufacturer as separate items:

Headers for Longspan Steel Joists, **LH**-Series.

Headers for Deep Longspan Steel Joists, **DLH**-Series.

Reinforcement in slabs over joists.

Centering material, decking, and attachments.

Miscellaneous framing between joists for openings at ducts, dumbwaiters, ventilators, skylights, etc.

Loose individual or continuous bearing plates and bolts or anchors for such plates.

Erection bolts for joist and Joist Girder end anchorage.

Horizontal bracing in the plane of the top and bottom chords from joist to joist or joist to structural framing and walls.

Wood nailers.

Moment plates.

Special joist configuration or bridging layouts for ductwork or sprinkler systems.

Shear Studs.

SECTION 6
PLANS AND SPECIFICATIONS

6.1 PLANS FURNISHED BY BUYER

The buyer shall furnish the seller plans and specifications as prepared by the **specifying professional** showing all material requirements and steel joist and/or steel Joist Girder designations, the layout of walls, columns, beams, girders and other supports, as well as floor and roof openings and partitions correctly dimensioned. The elevation of finished floors, roofs, and bearings shall be shown with due consideration taken for the effects of dead load deflections.

(a) Loads

The **specifying professional** shall clearly provide all design loads as described in Section 2.3 This includes the live loads to be used, the wind uplift if any, the weights of partitions and the location and amount of any special loads, such as monorails, fans, blowers, tanks, etc.

(b) Connections

Minimum End Anchorage for simple span gravity loading shall be in accordance with Steel Joist Institute Standard Specifications; Section 5.6 for **K-**Series, Section 104.4 for **LH-** and **DLH-**Series, and Section 1004.6 for Joist Girders. The end anchorage of a steel joist or Joist Girder is the connection of the joist or Joist Girder bearing seat to the support of the joist or Joist Girder.

The adequacy of the end anchorage connection (bolted or welded) between the joist or Joist Girder bearing seat and the supporting structure is the responsibility of the **specifying professional**. The contract documents shall clearly illustrate the end anchorage connection.

When the end anchorage is welded, it is recommended that the **specifying professional** consider a smaller fillet weld thickness in conjunction with a longer weld length.

The **specifying professional** is responsible for bridging termination connections. The contract documents shall clearly illustrate these termination connections.

The joist manufacturer is responsible for the design of the bearing seats of joists or Joist Girders for the loads designated by the **specifying professional** in the contract documents.

(c) Special Considerations

The **specifying professional** shall indicate on the construction documents special considerations including:

a) Profiles for non-standard joist and Joist Girder configurations (Standard joist and Joist Girder configurations are as indicated in the Steel Joist Institute Standard Specifications Load Tables & Weight Tables of latest adoption).
b) Oversized or other non-standard web openings
c) Extended Ends
d) Deflection criteria for live and total loads for non-SJI standard joists
e) Non-SJI standard bridging

6.2 PLANS FURNISHED BY SELLER

The seller shall furnish the buyer with steel joist placement plans to show the material as specified on the construction documents and are to be utilized for field installation in accordance with specific project requirements as stated in Section 6.1. Steel placement plans shall include, at a minimum, the following:

1. Listing of all applicable loads as stated in Section 6.1 and used in the design of the steel joists and Joist Girders as specified in the construction documents.
2. Profiles for non-standard joist and Joist Girder configurations (standard joist and Joist Girder configurations are as indicated in the Steel Joist Institute Standard Specifications Load Tables & Weight Tables of latest adoption).
3. Connection requirements for:
   a) Joist supports
   b) Joist Girder supports
   c) Field splices
   d) Bridging attachments
4. Deflection criteria for live load and total loads for non-SJI standard joists.
5. Size, location, and connections for all bridging
6. Joist headers

All material shall be identified with its mark which also appears on the bill of material. The shop paint shall be as noted on the joist placement plans. **Steel joist placement plans do not require the seal and signature of the joist manufacturer's registered design professional**.

6.3 DISCREPANCIES

The **specifying professional's** bid plans and specifications shall be assumed to be correct in the absence of written notice from the buyer to the contrary. When plans are furnished by the buyer which do not agree with the Architect's bid plans, such detailed plans shall be considered as a written notice of change of plans. However, it shall be the buyer's responsibility to advise the seller of those changes which affect the joists or Joist Girders.

6.4 APPROVAL

When joist placement plans are furnished by the seller, prints thereof are submitted to the buyer and owner for examination and approval. The seller allows a maximum of fourteen (14) calendar days in their schedule for the return of placement plans noted with the owner's and customer's approval, or approval subject to corrections as noted. The seller makes the corrections, furnishes corrected prints for field use to the owner/customer and is released by the owner/customer to start joist manufacture.

Approval by the owner/customer of the placement plans, sections, notes and joist schedule prepared by the seller indicates that the seller has correctly interpreted the contract requirements, and is released by the owner/customer to start joist manufacture. This approval constitutes the owner's/customer's acceptance of all responsibility for the design adequacy of any detail configuration of joist support conditions shown by the seller as part of the preparation of these placement plans.

Approval does not relieve the seller of the responsibility for accuracy of detail dimensions on the plans, nor the general fit-up of joists to be placed in the field.

6.5 CHANGES

When any changes in plans are made by the buyer (or the buyer's representative) either prior to or after approval of detailed plans, or when any material is required and was not shown on the plans used as the basis of the bid, the cost of such changes and/or extra material shall be paid by the buyer at a price to be agreed upon between buyer and seller.

6.6 CALCULATIONS

The seller shall design the steel joists and/or steel Joist Girders in accordance with the current Steel Joist Institute Standard Specifications Load Tables & Weight Tables to support the load requirements of Section 6.1. The **specifying professional** may require submission of the steel joist and Joist Girder calculations as prepared by a registered design professional responsible for the product design. If requested by the **specifying professional**, the steel joist manufacturer shall submit design calculations with a cover letter bearing the seal and signature of the joist manufacturer's registered design professional. In addition to standard calculations under this seal and signature, submittal of the following shall be included:

1. Non-SJI standard bridging details (e.g. for cantilevered conditions, net uplift, etc.)
2. Connection details for:
   a) Non-SJI standard connections (e.g. flush framed or framed connections)
   b) Field splices
   c) Joist headers

SECTION 7
HANDLING AND ERECTION*

The buyer and/or erector shall check all materials on arrival at job site and promptly report to seller any discrepancies and/or damages. The buyer and/or erector shall comply with the requirements of the Steel Joist Institute Standard Specifications Load Tables & Weight Tables of latest adoption in the handling and erection of material. To comply with these requirements, the Steel Joist Institute's Technical Digest 9, "Handling and Erection of Steel Joists and Joist Girders," shall also be followed.

When joists cannot be delivered as a single piece, they shall be permitted to be delivered in several pieces therefore requiring the pieces to be spliced together in the field. The manufacturer's instructions SHALL be followed to ensure matching pieces are joined, proper bolts are used, and any required bolt tensioning is incorporated.

All joists shall be handled by methods which avoid damage to any part of the joist. For long LH-Series joists, DLH-Series joists, or Joist Girders this may require the use of spreader bars, multiple hoisting cables, or multiple cranes as necessary to safely handle the joist. Hoisting cables shall be attached at panel points and shall be at panel point locations selected to minimize erection stresses.

The current OSHA SAFETY STANDARDS FOR STEEL ERECTION, 29 CFR PART 1926, SUBPART R- STEEL ERECTION, refers to certain joists at or near columns to be designed with sufficient strength to allow one employee to release the hoisting cable without the need for erection bridging. **This STANDARD shall not be interpreted that any joist at or near a column line is safe to support an employee without bridging installed.** Many limitations exist that prevent these joists from being designed to safely allow an employee on an un-bridged joist. Because of these limitations these joists shall be erected by incorporating erection methods ensuring joist stability and either:

1) Installing bridging or otherwise stabilizing the joist prior to releasing the hoisting cable, or
2) Releasing the hoisting cable without having a worker on the joist.

A steel joist or Joist Girder shall not be placed on any support structure unless such structure is stabilized. When steel joists or Joist Girders are landed on a structure, they shall be secured to prevent unintentional displacement prior to installation.

A bridging terminus point shall be established before joist bridging is installed.

Steel joist and Joist Girders shall not be used as anchorage points for a fall arrest system unless written directions to do so is obtained from a "qualified person"[1].

The buyer and/or erector shall check all materials on arrival at job site and promptly report to seller any discrepancies and/or damages. The buyer and/or erector shall comply with the requirements of the Steel Joist Institute Standard Specifications Load Tables & Weight Tables of latest adoption in the handling and erection of material.

No modification that affects the strength of a steel joist or Joist Girder shall be made without the written approval of the project engineer of record.

The seller shall not be responsible for the condition of paint finish on material if it is not properly protected after delivery.

The seller shall not be responsible for improper fit of material due to inaccurate construction work.

*For thorough coverage of this topic, refer to SJI Technical Digest 9, "Handling and Erection of Steel Joists and Joist Girders."

1) See Federal Register, Department of Labor, Occupational Safety and Health Administration (2001), 29 CFR Part 1926 Safety Standards for Steel Erection; Final Rule, §1926.757 Open Web Steel Joists - January 18, 2001,Washington, D.C. for definition of "qualified person".

SECTION 8
BUSINESS RELATIONS

8.1 PRESENTATION OF PROPOSALS

All proposals for furnishing material shall be made on a Sales Contract Form. After acceptance by the buyer, these proposals shall be approved or executed by a qualified official of the seller. Upon such approval the proposal becomes a contract.

8.2 ACCEPTANCE OF PROPOSALS

All proposals are intended for prompt acceptance and are subject to change without notice.

8.3 BILLING

Contracts on a lump sum basis are to be billed proportionately as shipments are made.

8.4 PAYMENT

Payments shall be made in full on each invoice without retention.

8.5 ARBITRATION

All business controversies which cannot be settled by direct negotiations between buyer and seller shall be submitted to arbitration. Both parties shall sign a submission to arbitration and if possible agree upon an arbitrator. If they are unable to agree, each shall appoint an arbitrator and these two shall appoint a third arbitrator. The expenses of the arbitration shall be divided equally between the parties, unless otherwise provided for in the agreements to submit to arbitration. The arbitrators shall pass final judgment upon all questions; both of law and fact, and their findings shall be conclusive.

GLOSSARY

Accessories. Structural components related to the design, fabrication and erection of *joists* and *Joist Girders* including, but not limited to sloped *end bearings*, *extended ends*, *ceiling extensions*, *bridging* and bridging anchors, *headers* and bottom chord lateral bracing for *Joist Girders*.

ASD (Allowable Strength Design). Method of proportioning structural components such that the *allowable strength* equals or exceeds the *required strength* of the component under the action of the *ASD load combinations*.

ASD Load Combination. *Load* combination in the *applicable building code* intended for allowable *strength design* (allowable stress design).

Allowable Strength*. *Nominal strength* divided by the *safety factor*, R_n/Ω.

Applicable Building Code. Building code under which the structure is designed.

Available Strength*. *Design strength* or *allowable strength* as appropriate.

Bay. The distance between the main structural frames or walls of a building.

Bearing. The distance that the bearing shoe or seat of a *joist* or *Joist Girder* extends over its masonry, concrete or steel support.

Bearing Plate. The steel plate used for a *joist* or *Joist Girder* to bear on when it is supported by masonry or concrete supports. The plate is designed by the *Specifying Professional* to carry the *joist* reaction to the supporting structure.

Bottom Chord Extension (BCX). The two angle extended part of a *joist* bottom chord from the first bottom chord panel point towards the end of the joist.

Bridging. In general, a member connected to a joist to brace it from lateral movement.See also Diagonal Bridging and Horizontal Bridging

Buckling. *Limit state* of sudden change in the geometry of a structure or any of its elements under a critical loading condition.

Buckling Strength. *Nominal strength* for *buckling* or instability *limit states*.

Buyer. The entity that has agreed to purchase *material* from the manufacturer and has also agreed to the terms of sale.

Camber. An upward curvature of the chords of a *joist* or *Joist Girder* induced during shop fabrication. Note, this is in addition to the pitch of the top chord.

Ceiling Extension. A *bottom chord extension* except that only one angle of the *joist* bottom chord is extended from the first bottom chord panel point towards the end of the joist.

Chords. The top and bottom members of a *joist* or *Joist Girder*. When a chord is comprised of two angles there is usually a gap between the members.

Clear Span. The actual clear distance or opening between supports for a *joist*, that is the distance between walls or the distance between the edges of flanges of beams.

Cold-Formed Steel Structural Member. Shape manufactured by press-braking blanks sheared from sheets, cut lengths of coils or plates, or by roll forming cold- or hot-rolled coils or sheets; both forming operations being performed at ambient room temperature, that is, without manifest addition of heat such as would be required for hot forming.

Collateral Load. All additional dead loads other than the weight of the building, such as sprinklers, pipes, ceilings, and mechanical or electrical components.

Connection. Combination of structural elements and *joints* used to transmit forces between two or more members. See also Splice.

Deck. A floor or roof covering made out of gage metal attached by welding or mechanical means to *joists*, beams, *purlins*, or other structural members and can be galvanized, painted, or unpainted.

Design Load. Applied *load* determined in accordance with either *LRFD load combinations* or *ASD load combinations*, whichever is applicable.

Design Strength*. *Resistance factor* multiplied by the *nominal strength*, ΦR_n.

Diagonal Bridging. Two angles or other structural shapes connected from the top chord of one *joist* to the bottom chord of the next joist to form an 'X' shape. These members are almost always connected at their point of intersection.

Diaphragm. Roof, floor or other membrane or bracing system that transfers in-plane forces to the lateral force resisting system.

Effective Length. Length of an otherwise identical column with the same strength when analyzed with pin-ended boundary conditions.

Elastic Analysis. *Structural analysis* based on the assumption that the structure returns to its original geometry on removal of the *load*.

End Diagonal or Web. The first web member on either end of a *joist* or *Joist Girder* which begins at the top chord at the seat and ends at the first bottom chord panel point.

Erector. The entity that is responsible for the safe and proper erection of the *materials* in accordance with all applicable codes and regulations.

Extended End. The extended part of a *joist* top chord with the seat angles also being extended from the end of the joist extension back into the joist and maintaining the standard end *bearing* depth over the entire length of the extension.

Factored Load. Product of a *load factor* and the *nominal load*.

Filler. A rod, plate or angle welded between a two angle web member or between a top or bottom chord panel to tie them together, usually located at the middle of the member.

Flexural Buckling. Buckling mode in which a compression member deflects laterally without twist or change in cross-sectional shape.

Flexural-Torsional Buckling. Buckling mode in which a compression member bends and twists simultaneously without change in cross-sectional shape.

Girt. Horizontal structural member that supports wall panels and is primarily subjected to bending under horizontal loads, such as wind load.

Gravity Load. *Load*, such as that produced by dead and live loads, acting in the downward direction.

Header. A structural member located between two *joists* or between a joist and a wall which carries another joist or joists. It is usually made up of an angle, channel, or beam with saddle angle connections on each end for bearing.

Horizontal Bridging. A continuous angle or other structural shape connected to the top and bottom chord of a joist.

Inelastic Analysis. *Structural analysis* that takes into account inelastic material behavior, including plastic analysis.

Instability. *Limit state* reached in the loading of a *structural component*, frame or structure in which a slight disturbance in the *loads* or geometry produces large displacements.

Joint. Area where two or more ends, surfaces or edges are attached. Categorized by type of fastener or weld used and the method of force transfer.

Joist. A structural load-carrying member with an open web system which supports floors and roofs utilizing hot-rolled or cold-formed steel and is designed as a simple span member. Currently, the SJI has the following joist designations: **K-**Series including **KCS**, **LH-**Series and **DLH-**Series, and **CJ-**Series.

Joist Girder. A primary structural load-carrying member with an open web system designed as a simple span supporting equally spaced concentrated loads of a floor or roof system acting at the panel points of the member and utilizing hot-rolled or cold-formed steel.

Joist Substitute. A structural member who's intended use is for very short spans (10 feet or less) where open web steel joists are impractical. They are usually used for short spans in skewed bays, over corridors or for outriggers. It can be made up of two or four angles to form channel sections or box sections.

Lateral Buckling. Buckling mode of a flexural member involving deflection normal to the plane of bending.

Lateral-Torsional Buckling. Buckling mode of a flexural member involving deflection normal to the plane of bending occurring simultaneously with twist about the shear center of the cross section.

Limit State. Condition in which a structure or component becomes unfit for service and is judged either to be no longer useful for its intended function (*serviceability limit state*) or to have reached its ultimate load-carrying capacity (*strength limit state*).

Load. Force or other action that results from the weight of building materials, occupants and their possessions, environmental effects, differential movement, or restrained dimensional changes.

Load Effect. Forces, stresses, and deformations produced in a *structural component* by the applied *loads*.

Load Factor. Factor that accounts for deviations of the *nominal load* from the actual *load*, for uncertainties in the analysis that transforms the *load* into a *load effect*, and for the probability that more than one extreme *load* will occur simultaneously.

Local Buckling**. *Limit state* of *buckling* of a compression element within a cross section.

LRFD (Load and Resistance Factor Design). Method of proportioning *structural components* such that the *design strength* equals or exceeds the *required strength* of the component under the action of the *LRFD load combinations*.

LRFD Load Combination. *Load* combination in the *applicable building code* intended for strength design (*Load and Resistance Factor Design*).

Material. *Joists*, *Joist Girders,* and *accessories* as provided by the *Seller*.

Nailers. Strips of lumber attached to the top chord of a *joist* so plywood or other flooring can be nailed directly to the *joist*.

Nominal Load. Magnitude of the *load* specified by the *applicable building code*.

Nominal Strength*. Strength of a structure or component (without the *resistance factor* or *safety factor* applied) to resist the *load effects*, as determined in accordance with these *Standard Specifications*.

Owner. The entity that is identified as such in the Contract Documents.

Permanent Load. *Load* in which variations over time are rare or of small magnitude. All other *loads* are *variable loads*.

Placement Plans. Drawings that are prepared depicting the interpretation of the Contract Documents requirements for the *material* to be supplied by the *Seller*. These floor and/or roof plans are approved by the *Specifying Professional*, *Buyer* or *Owner* for conformance with the design requirements. The *Seller* uses the information contained on these drawings for final material design. A unique piece mark number is typically shown for the individual placement of *joists*, *Joist Girders* and *accessories* along with sections that describe the *end bearing* conditions and minimum attachment required so that *material* is placed in the proper location in the field.

Ponding. Retention of water at low or irregular areas on a roof due solely to the deflection of flat roof framing.

Purlin. Horizontal structural member that supports roof deck and is primarily subjected to bending under vertical loads such as dead, snow or wind loads.

Quality Assurance. System of shop and field activities and controls implemented by the *owner* or his/her designated representative to provide confidence to the *owner* and the building authority that quality requirements are implemented.

Quality Control. System of shop and field controls implemented by the *seller* and *erector* to ensure that contract and company fabrication and erection requirements are met.

Required Strength*. Forces, stress, and deformations produced in a *structural component*, determined by either *structural analysis*, for the *LRFD* or *ASD load combinations*, as appropriate, or as specified by these *Standard Specifications*.

Resistance Factor, Φ. Factor that accounts for unavoidable deviations of the*nominal strength* from the actual strength and for the manner and consequences of failure.

Safety Factor, Ω. Factor that accounts for deviations of the actual strength from the*nominal strength*, deviations of the actual *load* from the *nominal load*, uncertainties in the analysis that transforms the *load* into a *load effect* and for the manner and consequences of failure.

Seller. A company certified by the Joist Institute engaged in the manufacture and distribution of *joists*, *Joist Girders* and *accessories*.

Service Load. *Load* under which serviceability limit states are evaluated.

Serviceability Limit State. Limiting condition affecting the ability of a structure to preserve its appearance, maintainability, durability, or the comfort of its occupants or function of machinery, under normal usage.

Slenderness Ratio. The ratio of the effective length of a column to the radius of gyration of the column about the same axis of bending.

Span. The centerline-to-centerline distance between structural steel supports such as a beam, column or *Joist Girder* or the *clear span* distance plus four inches onto a masonry or concrete wall.

Specified Minimum Yield Stress. Lower limit of *yield stress* specified for a material as defined by ASTM.

Specifying Professional. The licensed professional who is responsible for sealing the building Contract Documents, which indicates that he or she has performed or supervised the analysis, design and document preparation for the structure and has knowledge of the load-carrying structural system.

Splice. *Connection* between two structural members joined at their ends by either bolting or welding to form a single, longer member.

Stability. Condition reached in the loading of a *structural component*, frame or structure in which a slight disturbance in the *loads* or geometry does not produce large displacements.

Stabilizer Plate. A steel plate at a column or wall inserted between the end of a bottom *chord* of a *joist* or *Joist Girder*.

Standard Specifications. Documents developed and maintained by the Steel Joist Institute for the design and manufacture of open web steel joists and Joist Girders. The term “SJI Standard Specifications” encompass by reference the following:

> ANSI/SJI-**K-**2010 Standard Specification for Open Web Steel Joists, **K-**Series; ANSI/SJI-**LH/DLH-**2010 Standard Specifications for Longspan Steel Joists, **LH-**Series and Deep Longspan Steel Joists, **DLH-**Series; ANSI/SJI-**JG-**2010 Standard Specifications for Joist Girders and ANSI/**CJ-**2010 Standard Specifications for Composite Steel Joists.

Strength Limit State. Limiting condition affecting the safety of the structure, in which the ultimate load-carrying capacity is reached.

Structural Analysis. Determination of *load effects* on members and connections based on principles of structural mechanics.

Structural Drawings. The graphic or pictorial portions of the Contract Documents showing the design, location and dimensions of the work. These documents generally include plans, elevations, sections, details, connections, all loads, schedules, diagrams and notes.

Tagged End. The end of a *joist* or *Joist Girder* where an identification or piece mark is shown by a metal tag. The member must be erected with this tagged end in the same position as the tagged end noted on the *placement plan*.

Tensile Strength (of material). Maximum tensile stress that a material is capable of sustaining as defined by ASTM.

Tie Joist. A *joist* that is bolted at a column.

Top Chord Extension (TCX). The extended part of a *joist* top chord. This type of extension only has the two top chord angles extended past the joist seat.

Torsional Buckling. *Buckling* mode in which a compression member twists about its shear center axis.

Unbraced Length. Distance between braced points of a member, measured between the centers of gravity of the bracing members.

Variable Load. *Load* not classified as *permanent load*.

Webs. The vertical or diagonal members joined at the top and bottom *chords* of a *joist* or *Joist Girder* to form triangular patterns.

Yield Point. First stress in a material at which an increase in strain occurs without an increase in stress as defined by ASTM.

Yield Strength. Stress at which a material exhibits a specified limiting deviation from the proportionality of stress to strain as defined by ASTM.

Yield Stress. Generic term to denote either *yield point* or *yield strength*, as appropriate for the material.

NOTES:

* These terms are usually qualified by the type of *load effect*, e.g., nominal tensile strength, available compressive strength, design flexural strength.

**Term usually qualified by the type of component, e.g. local web buckling, local flange buckling, etc.

BAY LENGTH DEFINITIONS

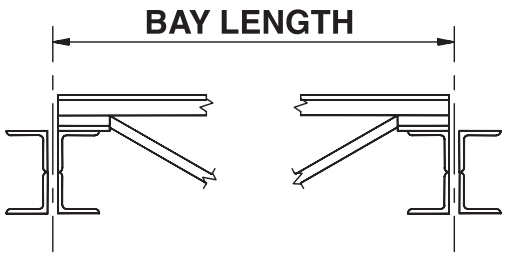

JOIST GIRDERS

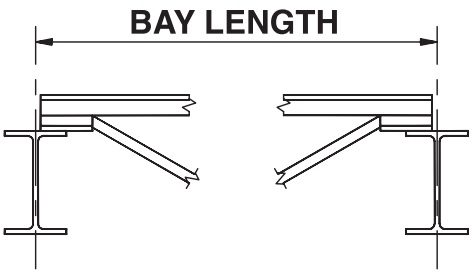

STEEL BEAM

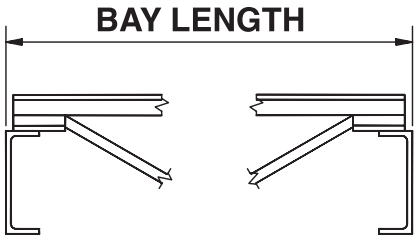

STEEL CHANNEL

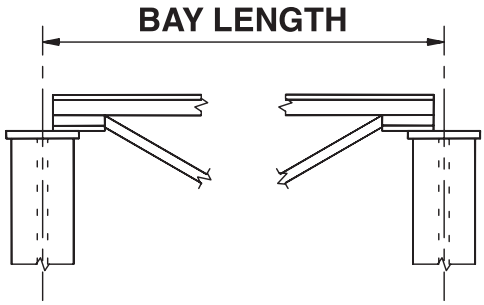

STEEL COLUMN

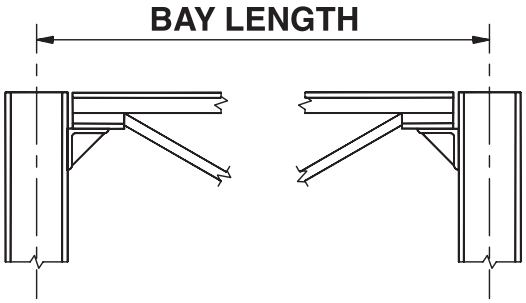

STEEL COLUMN

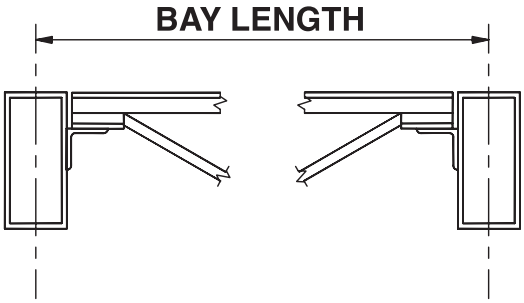

STEEL TUBE

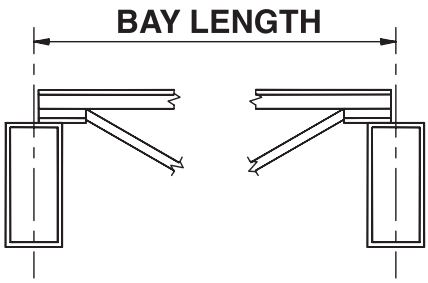

STEEL TUBE

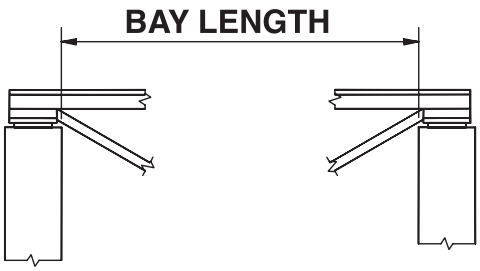

MASONRY OR TILT-UP

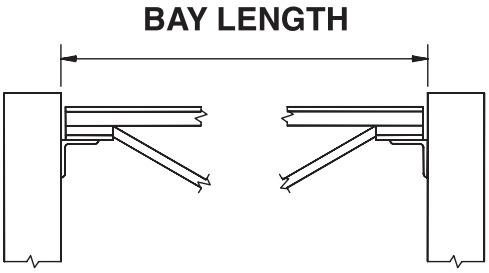

MASONRY OR TILT-UP

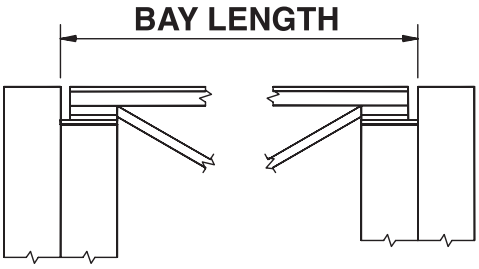

MASONRY WITH PILASTER

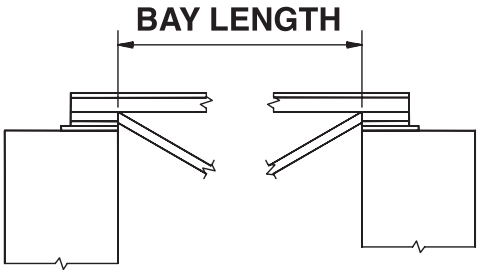

MASONRY OR TILT-UP

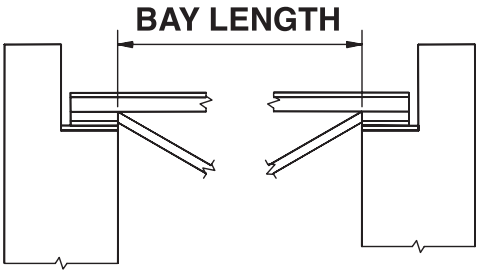

MASONRY OR TILT-UP

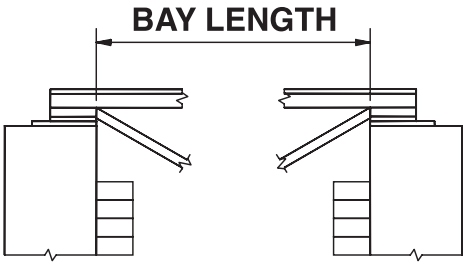

MASONRY WITH FACE BRICK

§ 1926.751 DEFINITIONS (Selected items only).

Anchored bridging means that the steel joist bridging is connected to a bridging terminus point.

Bolted diagonal bridging means diagonal bridging that is bolted to a steel joist or joists.

Bridging clip means a device that is attached to the steel joist to allow the bolting of the bridging to the steel joist.

Bridging terminus point means a wall, a beam, tandem joists (with all bridging installed and a horizontal truss in the plane of the top chord) or other element at an end or intermediate point(s) of a line of bridging that provides an anchor point for the steel joist bridging.

Column means a load-carrying vertical member that is part of the primary skeletal framing system. Columns do not include posts.

Constructibility means the ability to erect structural steel members in accordance with subpart R without having to alter the over-all structural design.

Construction load (for joist erection) means any load other than the weight of the employee(s), the joists and the bridging bundle.

Erection bridging means the bolted diagonal bridging that is required to be installed prior to releasing the hoisting cables from the steel joists.

Personal fall arrest system means a system used to arrest an employee in a fall from a working level. A personal fall arrest system consists of an anchorage, connectors, a body harness and may include a lanyard, deceleration device, lifeline, or suitable combination of these. The use of a body belt for fall arrest is prohibited.

Project structural engineer means the registered, licensed professional responsible for the design of structural steel framing and whose seal appears on the structural contract documents.

Qualified person (also defined in § 1926.32) means one who, by possession of a recognized degree, certificate, or professional standing, or who by extensive knowledge, training, and experience, has successfully demonstrated the ability to solve or resolve problems relating to the subject matter, the work, or the project.

Steel joist means an open web, secondary load-carrying member of 144 feet (43.9 m) or less, designed by the manufacturer, used for the support of floors and roofs. This does not include structural steel trusses or cold-formed joists.

Steel joist girder means an open web, primary load-carrying member, designed by the manufacturer, used for the support of floors and roofs. This does not include structural steel trusses.

Structural steel means a steel member, or a member made of a substitute material (such as, but not limited to, fiberglass, aluminum or composite members). These members include, but are not limited to, steel joists, joist girders, purlins, columns, beams, trusses, splices, seats, metal decking, girts, and all bridging, and cold formed metal framing which is integrated with the structural steel framing of a building.

§ 1926.757 OPEN WEB STEEL JOISTS

(a) General.

(1) Except as provided in paragraph (a)(2) of this section, where steel joists are used and columns are not framed in at least two directions with solid web structural steel members, a steel joist shall be field-bolted at the column to provide lateral stability to the column during erection. For the installation of this joist:

(i) A vertical stabilizer plate shall be provided on each column for steel joists. The plate shall be a minimum of 6 inch by 6 inch (152 mm by 152 mm) and shall extend at least 3 inches (76 mm) below the bottom chord of the joist with a 13 /16 inch (21 mm) hole to provide an attachment point for guying or plumbing cables.

(ii) The bottom chords of steel joists at columns shall be stabilized to prevent rotation during erection.

(iii) Hoisting cables shall not be released until the seat at each end of the steel joist is field-bolted, and each end of the bottom chord is restrained by the column stabilizer plate.

(2) Where constructibility does not allow a steel joist to be installed at the column:

(i) an alternate means of stabilizing joists shall be installed on both sides near the column and shall:

(A) provide stability equivalent to paragraph (a)(1) of this section;

(B) be designed by a qualified person;

(C) be shop installed; and

(D) be included in the erection drawings.

(ii) hoisting cables shall not be released until the seat at each end of the steel joist is field-bolted and the joist is stabilized.

(3) Where steel joists at or near columns span 60 feet (18.3 m) or less, the joist shall be designed with sufficient strength to allow one employee to release the hoisting cable without the need for erection bridging.

(4) Where steel joists at or near columns span more than 60 feet (18.3 m), the joists shall be set in tandem with all bridging installed unless an alternative method of erection, which provides equivalent stability to the steel joist, is designed by a qualified person and is included in the site-specific erection plan.

(5) A steel joist or steel joist girder shall not be placed on any support structure unless such structure is stabilized.

(6) When steel joist(s) are landed on a structure, they shall be secured to prevent unintentional displacement prior to installation.

(7) No modification that affects the strength of a steel joist or steel joist girder shall be made without the approval of the project structural engineer of record.

(8) Field-bolted joists.

(i) Except for steel joists that have been pre-assembled into panels, connections of individual steel joists to steel structures in bays of 40 feet (12.2 m) or more shall be fabricated to allow for field bolting during erection.

(ii) These connections shall be field-bolted unless constructibility does not allow.

(9) Steel joists and steel joist girders shall not be used as anchorage points for a fall arrest system unless written approval to do so is obtained from a qualified person.

(10) A bridging terminus point shall be established before bridging is installed.

(b) Attachment of steel joists and steel joist girders.

(1) Each end of "K" series steel joists shall be attached to the support structure with a minimum of two 1/8 -inch (3 mm) fillet welds 1 inch (25 mm) long or with two 1/2 -inch (13 mm) bolts, or the equivalent.

(2) Each end of "LH" and "DLH" series steel joists and steel joist girders shall be attached to the support structure with a minimum of two 1/4 -inch (6 mm) fillet welds 2 inches (51 mm) long, or with two 3/4 -inch (19 mm) bolts, or the equivalent.

(3) Except as provided in paragraph (b)(4) of this section, each steel joist shall be attached to the support structure, at least at one end on both sides of the seat, immediately upon placement in the final erection position and before additional joists are placed.

(4) Panels that have been pre-assembled from steel joists with bridging shall be attached to the structure at each corner before the hoisting cables are released.

(c) Erection of steel joists.

(1) Both sides of the seat of one end of each steel joist that requires bridging under Tables A and B shall be attached to the support structure before hoisting cables are released.

(2) For joists over 60 feet, both ends of the joist shall be attached as specified in paragraph (b) of this section and the provisions of paragraph (d) of this section met before the hoisting cables are released.

(3) On steel joists that do not require erection bridging under Tables A and B, only one employee shall be allowed on the joist until all bridging is installed and anchored.

▶ **NOTE: TABLES "A" & "B" HAVE BEEN EDITED TO CONFORM WITH STEEL JOIST INSTITUTE BOLTED DIAGONAL BRIDGING REQUIREMENTS. EDITED ITEMS ARE SHOWN WITH A STRIKE THROUGH NOTATION. NEW ITEMS ARE SHOWN IN RED**

▶ **NOTE: TABLE A. – ERECTION BRIDGING FOR SHORT SPAN JOISTS**

Joist	Span
~~8L1~~ 8K1	NM
10K1	NM
12K1	23–0
12K3	NM
12K5	NM
14K1	27–0
14K3	NM
14K4	NM
14K6	NM
16K2	29–0
16K3	30–0
16K4	32–0
16K5	32–0
16K6	NM
16K7	NM
16K9	NM
18K3	31–0
18K4	32–0
18K5	33–0
18K6	35–0
18K7	NM
18K9	NM
18K10	NM
20K3	32–0
20K4	34–0
20K5	34–0
20K6	36–0
20K7	39–0
20K9	39–0
20K10	NM
22K4	34–0
22K5	35–0
22K6	36–0
22K7	40–0
22K9	40–0
22K10	~~40–0~~ NM
22K11	~~40–0~~ NM
24K4	36–0
24K5	38–0
24K6	39–0
24K7	43–0
24K8	43–0
24K9	44–0
24K10	NM
24K12	NM
26K5	38–0
26K6	39–0

NM = diagonal bolted bridging not mandatory ~~for joists under 40 feet~~.

▶ **NOTE: TABLE A. – ERECTION BRIDGING FOR SHORT SPAN JOISTS (continued)**

Joist	Span
26K7	43–0
26K8	44–0
26K9	~~45–0~~ 44-0
26K10	49–0
26K12	NM
28K6	40–0
28K7	43–0
28K8	44–0
28K9	45–0
28K10	49–0
28K12	53–0
30K7	44–0
30K8	45–0
30K9	45–0
30K10	50–0
30K11	52–0
30K12	54–0
10KCS1	NM
10KCS2	NM
10KCS3	NM
12KCS1	NM
12KCS2	NM
12KCS3	NM
14KCS1	NM
14KCS2	NM
14KCS3	NM
16KCS2	NM
16KCS3	NM
16KCS4	NM
16KCS5	NM
18KCS2	35–0
18KCS3	NM
18KCS4	NM
18KCS5	NM
20KCS2	36–0
20KCS3	39–0
20KCS4	NM
20KCS5	NM
22KCS2	36–0
22KCS3	40–0
22KCS4	NM
22KCS5	NM
24KCS2	39–0
24KCS3	44–0
24KCS4	NM
24KCS5	NM
26KCS2	39–0
26KCS3	44–0
26KCS4	NM
26KCS5	NM
28KCS2	40–0
28KCS3	45–0
28KCS4	53–0
28KCS5	53–0
~~30KC53~~ 30KCS3	45–0
30KCS4	54–0
30KCS5	54–0

NM = diagonal bolted bridging not mandatory ~~for joists under 40 feet~~.

▶ **NOTE: TABLE A. – ERECTION BRIDGING FOR LONG SPAN JOISTS**

Joist	Span
18LH02	33–0
18LH03	NM
18LH04	NM
18LH05	NM
18LH06	NM
18LH07	NM
18LH08	NM
18LH09	NM
20LH02	33–0
20LH03	38–0
20LH04	NM
20LH05	NM
20LH06	NM
20LH07	NM
20LH08	NM
20LH09	NM
20LH10	NM
24LH03	35–0
24LH04	39–0
24LH05	40–0
24LH06	45–0
24LH07	NM
24LH08	NM
24LH09	NM
24LH10	NM
24LH11	NM
28LH05	42–0
28LH06	~~42–0~~ 46-0
28LH07	~~NM~~ 54-0
28LH08	~~NM~~ 54-0
28LH09	NM
28LH10	NM
28LH11	NM
28LH12	NM
28LH13	NM
32LH06	47–0 through 60–0
32LH07	47–0 through 60–0
32LH08	55–0 through 60–0
32LH09	NM through 60–0
32LH10	NM through 60–0
32LH11	NM through 60–0
32LH12	NM through 60–0
32LH13	NM through 60–0
32LH14	NM through 60–0
32LH15	NM through 60–0
36LH07	47–0 through 60–0
36LH08	47–0 through 60–0
36LH09	57–0 through 60–0
36LH10	NM through 60–0
36LH11	NM through 60–0
36LH12	NM through 60–0
36LH13	NM through 60–0
36LH14	NM through 60–0
36LH15	NM through 60–0
40LH08	47-0 through 59–0
40LH09	47-0 through 59–0
44LH09	52-0 through 59–0

NM = diagonal bolted bridging not mandatory ~~for joists under 40 feet~~.

(4) Employees shall not be allowed on steel joists where the span of the steel joist is equal to or greater than the span shown in Tables A and B except in accordance with § 1926.757(d).

(5) When permanent bridging terminus points cannot be used during erection, additional temporary bridging terminus points are required to provide stability.

(d) Erection bridging.

(1) Where the span of the steel joist is equal to or greater than the span shown in Tables A and B, the following shall apply:

(i) A row of bolted diagonal erection bridging shall be installed near the midspan of the steel joist;

(ii) Hoisting cables shall not be released until this bolted diagonal erection bridging is installed and anchored; and

(iii) No more than one employee shall be allowed on these spans until all other bridging is installed and anchored.

(2) Where the span of the steel joist is over 60 feet (18.3 m) through 100 feet (30.5 m), the following shall apply:

(i) All rows of bridging shall be bolted diagonal bridging;

(ii) Two rows of bolted diagonal erection bridging shall be installed near the third points of the steel joist;

(iii) Hoisting cables shall not be released until this bolted diagonal erection bridging is installed and anchored; and

(iv) No more than two employees shall be allowed on these spans until all other bridging is installed and anchored.

(3) Where the span of the steel joist is over 100 feet (30.5 m) through 144 feet (43.9 m), the following shall apply:

(i) All rows of bridging shall be bolted diagonal bridging;

(ii) Hoisting cables shall not be released until all bridging is installed and anchored; and

(iii) No more than two employees shall be allowed on these spans until all bridging is installed and anchored.

(4) For steel members spanning over 144 feet (43.9 m), the erection methods used shall be in accordance with § 1926.756.

(5) Where any steel joist specified in paragraphs (c)(2) and (d)(1), (d)(2), and (d)(3) of this section is a bottom chord bearing joist, a row of bolted diagonal bridging shall be provided near the support(s). This bridging shall be installed and anchored before the hoisting cable(s) is released.

(6) When bolted diagonal erection bridging is required by this section, the following shall apply:

(i) The bridging shall be indicated on the erection drawing;

(ii) The erection drawing shall be the exclusive indicator of the proper placement of this bridging;

(iii) Shop-installed bridging clips, or functional equivalents, shall be used where the bridging bolts to the steel joists;

(iv) When two pieces of bridging are attached to the steel joist by a common bolt, the nut that secures the first piece of bridging shall not be removed from the bolt for the attachment of the second; and

(v) Bridging attachments shall not protrude above the top chord of the steel joist.

(e) Landing and placing loads.

(1) During the construction period, the employer placing a load on steel joists shall ensure that the load is distributed so as not to exceed the carrying capacity of any steel joist.

(2) Except for paragraph (e)(4) of this section, no construction loads are allowed on the steel joists until all bridging is installed and anchored and all joist-bearing ends are attached.

(3) The weight of a bundle of joist bridging shall not exceed a total of 1,000 pounds (454 kg). A bundle of joist bridging shall be placed on a minimum of three steel joists that are secured at one end. The edge of the bridging bundle shall be positioned within 1 foot (.30 m) of the secured end.

(4) No bundle of decking may be placed on steel joists until all bridging has been installed and anchored and all joist bearing ends attached, unless all of the following conditions are met:

(i) The employer has first determined from a qualified person and documented in a site-specific erection plan that the structure or portion of the structure is capable of supporting the load;

(ii) The bundle of decking is placed on a minimum of three steel joists;

(iii) The joists supporting the bundle of decking are attached at both ends;

(iv) At least one row of bridging is installed and anchored;

(v) The total weight of the bundle of decking does not exceed 4,000 pounds (1816 kg); and

(vi) Placement of the bundle of decking shall be in accordance with paragraph (e)(5) of this section.

(5) The edge of the construction load shall be placed within 1 foot (.30 m) of the bearing surface of the joist end.

ILLUSTRATIONS OF OSHA BRIDGING TERMINUS POINTS

(NON-MANDATORY)

Guidelines for Complying with OSHA Steel Erection Standard, Paragraph §1926.757(a)(10) and §1926.757(c)(5).

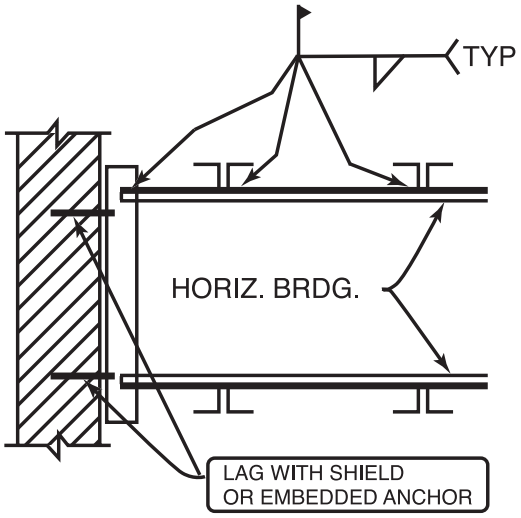

HORIZONTAL BRIDGING
TERMINUS AT WALL

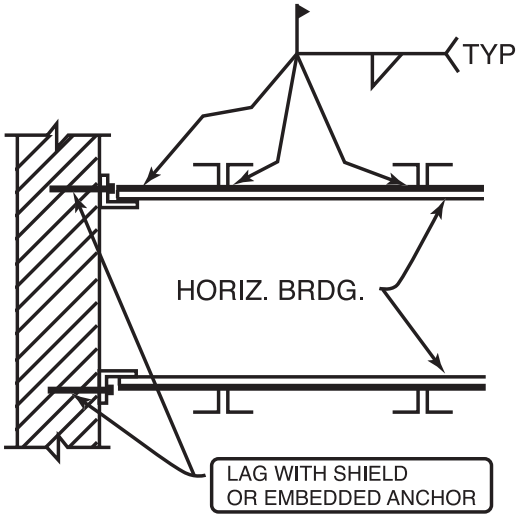

HORIZONTAL BRIDGING
TERMINUS AT WALL

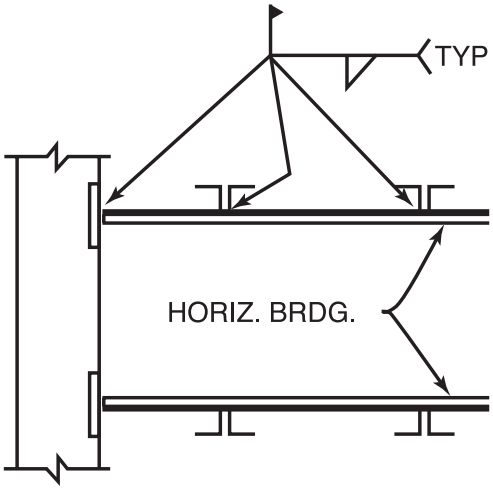

HORIZONTAL BRIDGING
TERMINUS AT PANEL WALL

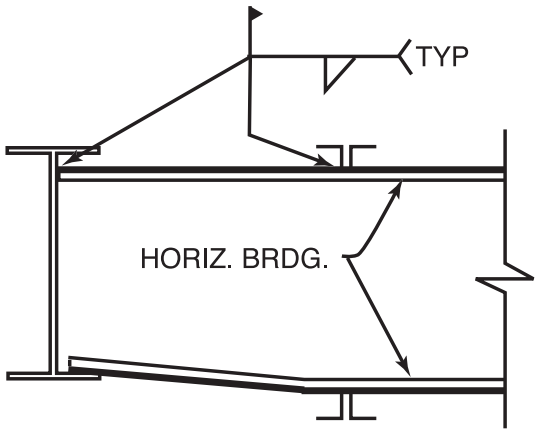

HORIZONTAL BRIDGING
TERMINUS AT
STRUCTURAL SHAPE

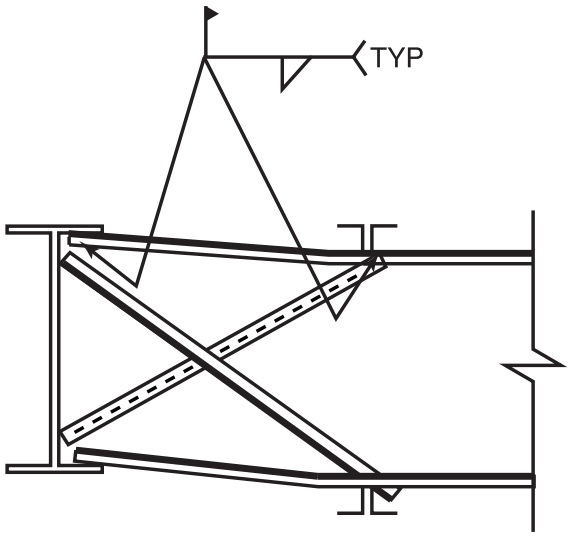

HORIZONTAL BRIDGING TERMINUS AT STRUCTURAL SHAPE WITH OPTIONAL "X-BRIDGING"

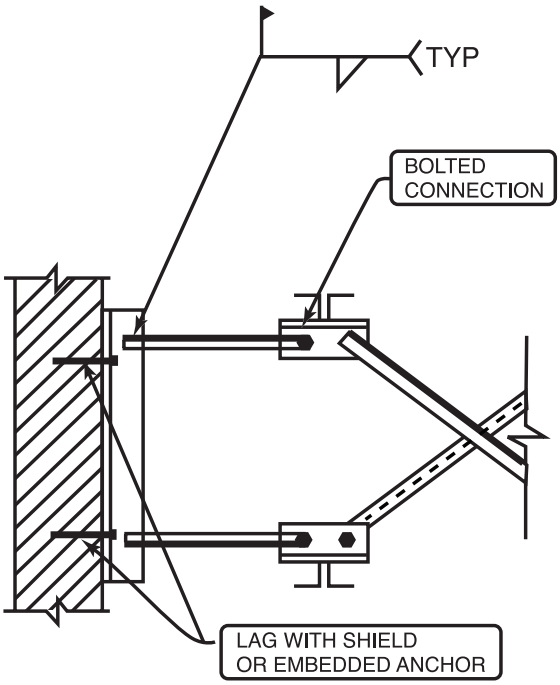

BOLTED DIAGONAL BRIDGING TERMINUS AT WALL

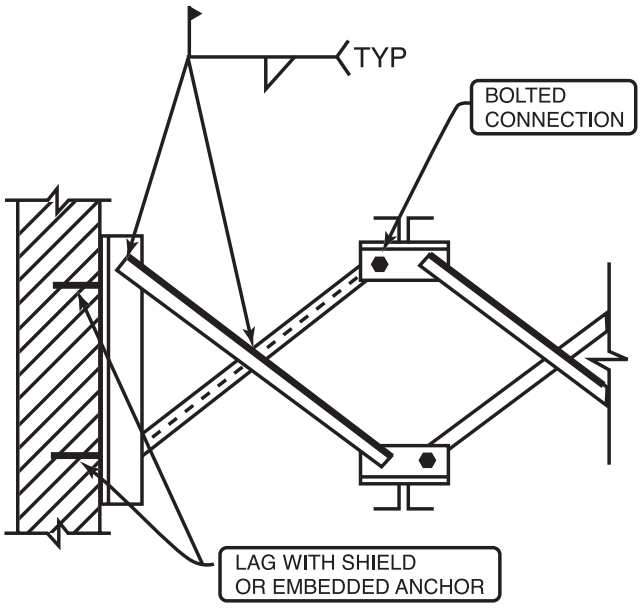

BOLTED DIAGONAL BRIDGING TERMINUS AT WALL

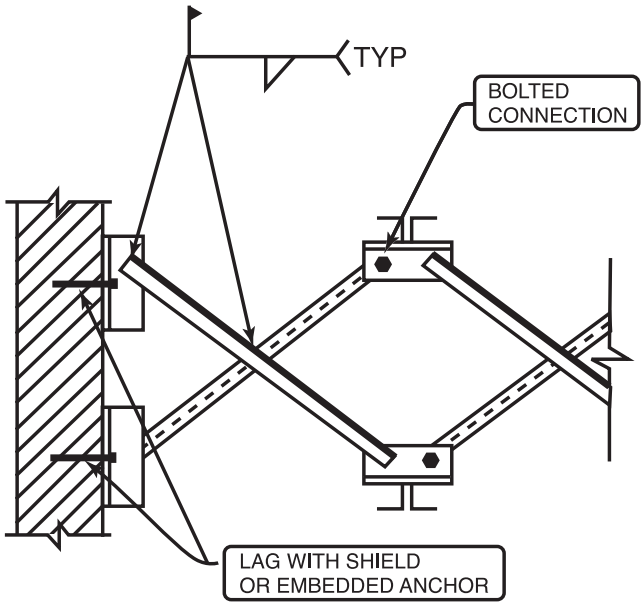

BOLTED DIAGONAL BRIDGING TERMINUS AT WALL

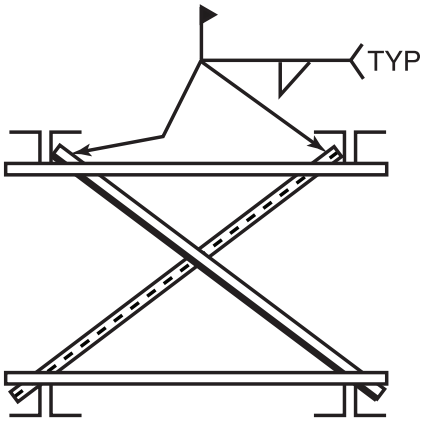

JOISTS PAIR BRIDGING
TERMINUS POINT

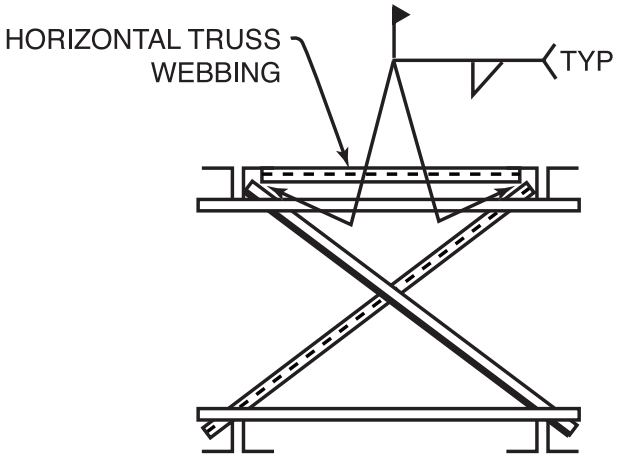

JOISTS PAIR BRIDGING
TERMINUS POINT

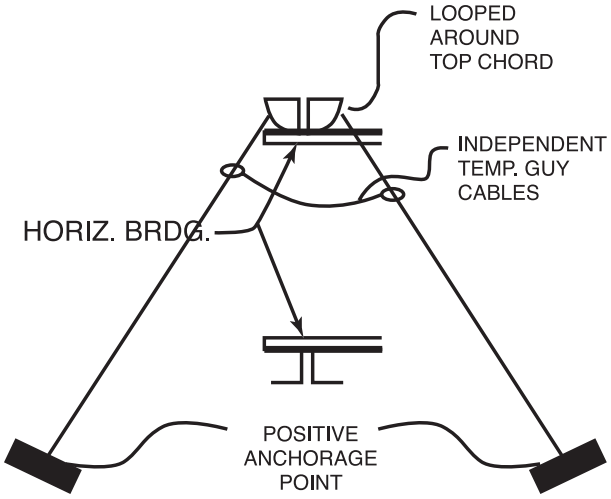

HORIZONTAL BRIDGING
TERMINUS POINT
SECURED BY TEMP.
GUY CABLES

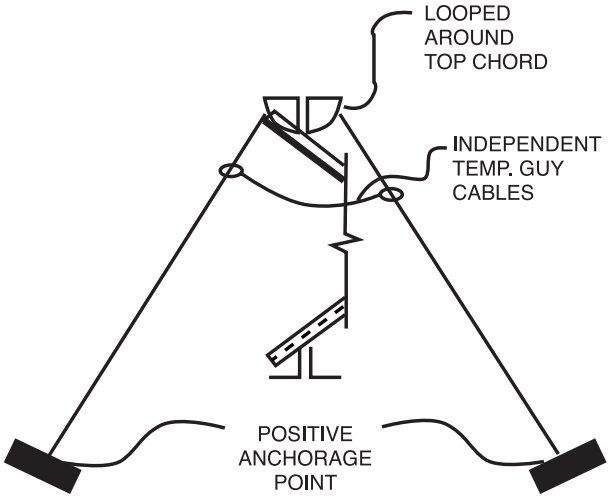

DIAGONAL BRIDGING
TERMINUS POINT
SECURED BY TEMP.
GUY CABLES

PUBLICATIONS

Vulcraft (Refer to back cover for address and telephone number of division nearest you)

STEEL JOISTS AND JOIST GIRDERS 2012

VULCRAFT COMPOSITE AND NONCOMPOSITE FLOOR JOISTS 2009

DESIGNING WITH VULCRAFT JOIST, STEEL JOIST GIRDERS AND STEEL DECK, 2nd ed.
James Fisher, Ph.D., P.E., Michael West, P.E., AIA, Juius P. Van de Pas, P.E.
(A 168 page book provided to engineers and architects for help in designing with steel joists, joist girders and steel deck)

STEEL DECK INSTITUTE - P.O. Box 25, Fox River Grove, IL 60021 Phone: (847) 458-4647 Fax (847) 458-4648
e-mail steve@sdi.org

DESIGN MANUAL FOR COMPOSITE DECKS, FORM DECKS AND ROOF DECKS - NO. 31

ROOF DECK CONSTRUCTION HANDBOOK - NO. RDCH1

DIAPHRAGM DESIGN MANUAL SECOND EDITION NO. DDMO3

COMPREHENSIVE STEEL DECK INSTITUTE BINDER - NO. BF

SDI MANUAL OF CONSTRUCTION WITH STEEL DECK - NO. MOC2

COMPOSITE STEEL DECK DESIGN HANDBOOK. NO. CDD2

STANDARD PRACTICE DETAILS. - NO. SPD2

DECK DAMAGE & PENETRATIONS - NO. DDP

HOW TO UPDATE DIAPHRAGM TABLES - NO. HUDT

METAL DECK & CONCRETE QUANTITIES - NO. MDCQ

A RATIONAL APPROACH TO STEEL DECK CORROSION PROTECTION - NO. SDCP

Steel Joist Institute - 234 W. Cheves Street, Florence, SC 29501
(843) 407-4091 Fax: (843) 407-4044, e-mail: stljoist@infi.net, web site: www.steeljoist.org

STANDARD SPECIFICATIONS, LOAD TABLES AND WEIGHT TABLES FOR STEEL JOISTS AND JOIST GIRDERS 43RD Edition (2010)

80 YEARS OF OPEN WEB STEEL JOIST CONSTRUCTION (2009)

TECHNICAL DIGEST #3 - Ponding (June 2007)

TECHNICAL DIGEST #5 - Vibration (1988)

TECHNICAL DIGEST #6 - Uplift Loading (June 2003)

TECHNICAL DIGEST #8 - Welding of Open Web Steel Joist (October 2008)

TECHNICAL DIGEST #9 - Handling and Erection (March 2009)

TECHNICAL DIGEST #10 - Design of Fire Resistive Assemblies with Steel Joists (2003)

TECHNICAL DIGEST #11 - Design of Joist - Girder Frames (November 2007)

TECHNICAL DIGEST #12 - Evaluation and Modification of Open Web Joists and Joists Girders (February 2007)

GUIDE FOR SPECIFYING STEEL JOISTS WITH LOAD AND RESISTANCE FACTOR DESIGN (2002)

NEW LRFD GUIDE (2000)

COMPUTER VIBRATION PROGRAM Ver1.2 (Used in Conjunction with Technical Digest #5)

SJI VIDEO - Introduction to Steel Joists

VIDEO - SAFE ERECTION OF OPEN WEB STEEL JOISTS AND JOIST GIRDERS (English & Spanish)

NUCOR
VULCRAFT GROUP

Manufacturing Locations

ALABAMA
7205 Gault Avenue N.
Fort Payne, AL 35967
P.O. Box 680169
Fort Payne, AL 35968
256-845-2460
Fax: 256-845-2823

INDIANA
6610 County Road 60
P.O. Box 1000
St. Joe, IN 46785
260-337-1800
Fax: 260-337-1801

NEBRASKA
1601 West Omaha Avenue
Norfolk, NE 68701
P.O. Box 59
Norfolk, NE 68702
402-644-8500
Fax: 402-644-8528

SOUTH CAROLINA
1501 West Darlington Street
P.O. Box 100520
Florence, SC 29501
843-662-0381
Fax: 843-662-3132

TEXAS
175 County Road 2345
P.O. Box 186
Grapeland, TX 75844
936-687-4665
Fax: 936-687-4290

UTAH
1875 West Highway 13 South
P.O. Box 637
Brigham City, UT 84302
435-734-9433
Fax: 435-723-5423

VULCRAFT OF NEW YORK, INC.
5362 Railroad Street
Chemung, NY 14825
607-529-9000
Fax: 607-529-9001

VULCRAFT - NATIONAL ACCOUNTS
1000 Hurricane Shoals Road
Building A - Suite 150
Lawrenceville, GA 30043
770-338-0970
Fax: 770-295-0001